EVERLAST
IGBT INVERTER TECHNOLOGY

CYCLONE 312i

MIG · DC LIFT TIG · DC STICK WELDER

Operator's Manual

Covers the Cyclone 312i and Cyclone 312i Pro. Safety, setup and operation for MIG, flux-cored, DC Lift TIG and DC Stick welding.



315 A MIG OUTPUT · 40%	**275 A** TIG OUTPUT · 40%
250 A STICK OUTPUT · 40%	**240V** 1 PHASE

NEED HELP? TECHNICAL SUPPORT Call 1-877-755-9353, ext. 226 · tech@everlastwelders.com

WARNING. Electric shock, arc rays, fumes and gases, and fire can cause serious injury or death. Read this entire manual before installing, operating or servicing this equipment.

Welcome to Everlast

Thank you for choosing the Everlast Cyclone 312i or Cyclone 312i Pro. This manual covers both models, which share the same specifications, controls and operation. It covers safety, setup, controls, operation and care of your welder. Keep it with the machine and make sure everyone who uses the welder reads it first.

⚠ WARNING



Read this manual before use

This welder has many features that new owners may not know or expect. The manual builds on earlier sections, so read it from beginning to end; skipping around will cause you to miss important details. Even if you are an experienced welder, do not assume this unit works like other brands or models you have used. If you do not have the knowledge or training to operate this welder safely, do not use it until you have received proper training.

EVERLAST SUPPORT

1-877-755-9353

Technical support: ext. 226
tech@everlastwelders.com
Sales: ext. 201
Parts: ext. 206
www.everlastwelders.com

EVERLAST POWER EQUIPMENT

380 Swift Ave., Unit 12
South San Francisco, CA 94080
USA

Have your serial number, your settings and a short description of the problem ready when you call.

Ownership Record

Fill this in when the welder arrives. Your serial number and proof of purchase are needed for warranty service and parts.

Welder Serial Number _____

Model: Cyclone 312i ☐ 312i Pro ☐

Purchase Date _____

Purchased From _____

Optional Accessory Serial Number (spool gun, cooler, etc.) _____

Registration Date _____

Keep your purchase receipt with this manual. You may want to staple a copy to this page.

About This Manual

Read the entire manual before installing or using the welder, paying close attention to every Danger, Warning, Caution and Notice message. Any setting given in this manual is a general guide or starting point; it is not the only correct setting. Product specifications and features are subject to change without notice, and units in current production may have updated designs or programming not found on earlier units. This manual is a general guide; it is not a complete course in welding safety, welding technique or repair.

Contents

01	**Safety** Read and understand this section before anyone operates the welder.	4
02	**Warranty, Registration & Support** Customer greeting, procedures and warranty.	10
03	**General Information & Specifications** Generators, duty cycle, 312i vs. 312i Pro, specifications.	13
04	**Installation & Power** Unpacking, assembly, inspection and connecting to the power source.	21
05	**Front, Rear & Control Panel** Component identification, PowerSet vs. manual operation and start-up.	28
06	**Shielding Gas** Gas selection, regulator connection and gas types.	40
07	**Polarity & Connections** MIG, flux-cored, spool/push-pull gun, TIG and stick.	45
08	**MIG Gun, Liner, Drive Rolls & Wire** Installation and assembly.	52
09	**Tungsten Selection & Grinding** Tungsten types and preparation.	61
10	**Setup, Navigation & Programs** General setup and use, navigation, saving and recalling programs.	65
11	**Manual & PowerSet Menus** MIG, flux-cored, DC TIG and stick menus.	73
12	**Run-In & Trigger Modes** Run-in feature and 2T/4T torch switch.	87
13	**Parameters, Functions & Welding Terms** Explanation of parameters, functions and terms.	89
14	**MIG Gun & TIG Torch Parts** 24 and 36 series MIG guns, 17V series TIG torch.	101
15	**312i Pro Cage & Undercarriage Assembly** Surround cage and undercarriage (312i Pro).	105
16	**Troubleshooting & Error Codes** Common welding issues and error codes.	109
17	**Maintenance** Care and cleaning.	113
A	**Settings Quick Reference** Starting points only.	114

Connect only one gun or torch at a time.

01 Safety

Read and understand this section before anyone operates the welder.

IMPORTANT!

Before operating the welder, read this manual from beginning to end. A thorough read-through of this manual is important to help guide you in the safe and competent operation of the welder. This welder is designed and intended for professional use. This welderhas many features that new owners or users may not understand or be familiar with. The manual is written in a way that builds knowledge upon previous information presented in the manual. If sections are randomly read through, details of important information will be missed. In certain sections, where details of operation may overlap, some information may be repeated from previous sections to highlight continuity between different functions and settings. Though some general welding information is given to illustrate the parameters and functions of the welder, the manual is not meant to train or instruct in welding. The manual's scope and intent is to guide the professional user in safe use of the basic parameters and functions of the welder. Any explicit setting or detail offered in this manual is intended as a general guide, or a starting point, and should not be construed to be a final setting to be applied in any or all circumstances. 2

NOTICE

Product Specifications and features are subject to change without notice. While every attempt has been made to provide the most accurate and current information possible at the time of publication, this manual is intended to be a general guide and not intended to be exhaustive in its content regarding safety, welding, or the operation/maintenance of this unit. Due to multiple variables that exist in the welding field and the changing nature of it and of the Everlast product line itself, Everlast Power Equipment INC. does not guarantee the accuracy, completeness, authority or authenticity of the information contained within this manual or of any information offered during the course of conversation or business by any Everlast employee or subsidiary. The owner of this product assumes all liability for its use and maintenance. Everlast Power Equipment INC. does not warrant this product or this document for fitness for any particular purpose, for performance/accuracy or for suitability of application. Furthermore, Everlast Power Equipment INC. does not accept liability for injury or damages, consequential or incidental, resulting from the use of this product or resulting from the content found in this document or accept claims by a third party of such liability.

⚠ WARNING



California Proposition 65 Warning:

This product, when used for welding or cutting, produces fumes or gases which contain chemicals known to the State of California to cause birth defects and in some cases, cancer. (California Health & Safety Code § 25249.5 et seq.)

Warning: Cancer and/or Reproductive Harm

www.P65warnings.ca.gov

NOTICE

The Cyclone Series of welders are designed for use by professional welders in commercial settings. Commercial settings are equipped with industrial wiring and power supply. This welder requires a dedicated circuit and special welder outlets that are not typically found in home garages. The higher Amperage outlets and breakers required by this welder may not allow connection to a standard home panel box with out significant modification to meet national electric codes and the input requirements of the welder. (See specifications page of inrush and rated current.) Additionally, use in home settings may cause interference with electronics. Besides a required dedicated circuit, this welder may also require additional grounding of all metal items and the welder by a commercial electrician to prevent undesirable operation if interference is observed.



Safe operation and proper maintenance is your responsibility.

Everlast is dedicated to keeping safety a top priority. While we have compiled this operator's manual to instruct you in basic safe operation and maintenance of your Everlast product, it is no substitute for observing safe welding practices and behavior. Safe welding and related cutting operations require basic knowledge, experience and ultimately the exercise of common sense. Welding does significant hazards to your health and life! Exercise extreme caution and care in all activities related to welding or cutting. Your safety, health and even life depends upon it.

⚠ WARNING



If you do not have proper knowledge or capability to safely operate this machine, do not use this machine until proper training has been received!

While accidents are never planned, preventing an accident requires careful planning. Stay alert!

Please carefully read this manual before you operate your Everlast unit.

The warranty does not cover damage or harm created by improper use. neglect of the machine or failure to follow safe operating practices.

NOTICE



Welding and cutting operations may generate undesirable High Frequency (HF) and EMF energy. This can interfere with surrounding electronic equipment such as computers, routers, CNC equipment, televisions, radios, fluorescent lighting etc. If disturbance in surrounding electrical and electronic equipment is noted, consult a licensed electrician to help properly ground surrounding equipment to limit the interference. This machine may cause GCFI and ground fault outlets to malfunction. This unit is designed to be operated on a dedicated, properly grounded circuit.

Safety Warnings, Dangers, Cautions and Instructions

NOTICE

This unit manual is intended for users with basic knowledge and skillset in welding. It is your responsibility to make certain that the use of this welder is restricted to persons who have read, understand and follow the warnings and instructions in this manual. If you or the operator needs further instruction, contact Everlast welding support at 1-877-755-9353 ext. 226 or seek qualified professional advice and training.

⚠ WARNING



High Frequency (HF) energy generated by the inverter can interfere with the operation of pacemakers and can damage pacemakers. Consult with your physician and pacemaker manufacturer *before* entering an area where welding and cutting equipment is in operation and *before* using this welder. Some pacemakers have limited shielding. Alert any users or customers of this potential problem.

⚠ WARNING



Use approved safety glasses with wrap around shields and sides while welding and working in the weld area or serious eye damage or loss of vision may result. Use a grinding shield in addition to the safety glasses during chipping and grinding operations.

⚠ WARNING



When welding always use an approved welding helmet or shielding device equipped with at least an equivalent of a shade 9 or greater. Increase the shade number rating as amperage increase over 100 amps. Inspect helmet for cracks in lenses and in the helmet. Keep lens covers in good condition and replace as necessary.

⚠ WARNING



Welding/cutting operations carry inherent risks which include but not limited to possible cuts burns, electrical shocks, lung damage, eye damage and even death. Take all appropriate measures to use proper Personal Protective Equipment (PPE). Always use leather welding gloves, closed toe (preferably reinforced or steel toe leather shoes, and long-sleeved flame resistant clothing (i.e. denim). Do not wear Poly/Nylon blend materials.

⚠ DANGER



Welding poses shock and electrocution risks. Keep this welding equipment dry. Do not weld in the rain or where moisture accumulates. Use dry, rubber soled shoes, gloves and clothing when welding. Do not rest or contact work clamp (ground) when welding. Keep all parts of the body insulated from the part being welded when possible. Do not touch both terminals or connections at the same time. Consider all welder parts to be “live” at all times even if no welding is being performed. Do not use frayed welding cables.

⚠ CAUTION



Fires are possible but also preventable while welding. Always remove flammable rags, papers, and other materials from the weld area. Keep rags stored in an approved flame proof canister. Keep a fully charged fire extinguisher at hand. Remove any fuels, oils, paint, pressurized spray cans, and chemicals from the weld area. Make sure any smoke/fire detectors are function properly. Do not weld on tanks, drums or barrels, especially if pressurized or sealed. Do not weld on any container that previously held fuel or chemicals. Make sure the weld area is clear of flammable materials such as grass or wood shavings solvents and fuels. Do not wear frayed or loose clothing. Visually inspect and recheck the work area after welding looking for smoldering debris or flames.

⚠ WARNING



Welding gas cylinders are under high pressure. Keep all gas cylinders upright and chained to a cart or held safely in a safety holding pen. Never transport gas cylinders in an enclosed car van or other vehicle. Transport gas cylinders securely. Keep all cylinders capped while not in use or during transport. Replace the cap on the cylinder when it is going to be more than 24 hours before use. Do not use or attempt to repair faulty regulators. Never weld on gas cylinders. Keep gas cylinders away from direct sparks.

Safety Warnings, Dangers, Cautions and Instructions

⚠ DANGER



Welding and cutting operations pose serious inhalation hazards. Some of these hazards are immediate while others are cumulative in their effect. Do not weld in enclosed spaces or in areas without adequate ventilation. Fumes and gases released in the welding and cutting operations can be toxic. Use fans or respiration equipment to insure adequate ventilation if you are welding in a shop or garage area. Do not weld on galvanized metal under any circumstance. You may develop metal fume fever. Symptoms are similar to flu like symptoms. Seek medical advice and treatment if you are exposed to galvanized welding fumes.

If you experience any eye burning, nose or throat irritation while welding, these are signs that you need more ventilation.

If you feel these symptoms:

- Stop work immediately and relocate work area with better ventilation.
- Wash and clean your face and hands.
- Stop work completely and seek medical help if irritation persists

⚠ DANGER



Never use brake cleaner or any chlorinated solvent to clean or degrease metal scheduled to be welded or other related equipment in the area being welded. The heating of this cleaner and its residue will create highly toxic phosgene gas. Small amounts of this vapor are harmful and can lead to organ failure and death. If degreasing of a part is necessary, use Acetone or an approved pre-weld cleaner. Use the proper personal protective equipment (PPE) when handling any cleaners/solvents.

⚠ DANGER



People with pacemakers should consult a physician and pacemaker manufacturer before welding. There is a potential for damage or serious malfunction resulting in death. High Frequency energy (HF)/Electromagnetic Fields generated during welding can interfere with pacemaker signals, even permanently damaging it. Some pacemakers offer some shielding, but restrictions regarding amperage and HF/HV starting of TIG arcs may be placed upon the individual. Warn all potential bystanders that they should exit the work area if they have a pacemaker or similar medical equipment before welding. Consult with a Physician if a pacemaker is expected to be implanted.

⚠ DANGER



Never defeat or modify any safety guards or shields. Keep all safety covers and shields in place.

Never place your fingers in or near a fan shroud or insert any object into the fan(s).

⚠ WARNING



The intense flashing and strobing effects that are common with welding processes, may cause seizures in people with a history of photo-sensitive Epilepsy. Be mindful of others in the welding area who may have such sensitivities. Keep them clear of the area.

Safety Warnings, Dangers, Cautions and Instructions

⚠ CAUTION



Trip Hazards exist around welders. Cords, cables, welding leads and hoses pose a trip hazard. Be aware of their location and inform others of their location. Tape and secure them so they will stay out of high traffic areas.

⚠ CAUTION



Welded metal can stay hot long after welding is completed. Burns may occur. Always wear gloves or use tongs/pliers when handling welded or cut metal. Remember the heat from the metal may catch other material on fire. Always have a fire-proof area ready to place welded components until they fully cool. Use soap stone or a metal marking marker to label the metal as “HOT” to serve as a reminder to all present in the area.

⚠ CAUTION



Welding and cutting operations generate high levels of ultraviolet (UV) radiation which can burn and damage skin and eyes. The intensity is so high that exposed skin and eyes can burn in a few minutes of exposure. Minimize direct skin and eye exposure to this intense form of radiation by using proper PPE and sun screen where appropriate.

⚠ CAUTION



Do not allow bystanders. Do not allow others without proper Personal Protection Equipment (PPE) suitable for welding to stand in the welding area or to observe welding and welding related activities. If protection is not readily available, use a welding screen to separate the welding area from the rest of the area. If no protection or screen is available, physically exclude them from the welding area by a wall or other solid divider. Keep all pets and young children away from the welding area.

⚠ CAUTION



Electromagnetic Fields can be generated by this welder and radiate into the work place. The effect of EMF is not fully known. Exercise caution when welding by: NOT draping welding leads (guns/cables) over your shoulders or arms, NOT coiling them around your body, NOT inserting yourself directly between the cables, and by NOT contacting the unit while welding. DO keep the work clamp connected as close as possible to the area of the weld and directly to the object being welded whenever possible.

NOTICE



If any electrical disturbance is noticed as a result of the High Frequency operation of this unit during arc starting, the HF service bolt located on the rear of this unit should be connected directly to a 12 gauge wire that is bonded directly to an outside copper ground rod driven into moist soil. (see location on rear panel page) Additionally, all metal items including any metal frame or sheeting of the building should be connected and grounded to separate copper ground rods driven into the ground at 10 foot intervals around the perimeter of the building. This includes items such as tables, carts, rack material, metal surrounds, etc. that may act as “antenna” to radiate/absorb HF energy. Additionally, all cords and welding leads should be twist-

02 Warranty, Registration & Support

Customer greeting, procedures and warranty.

THANK YOU! We appreciate you as a valued customer and hope that you will enjoy years of use from your welder. We work to please the customer by providing a well supported, quality product. To make sure that you receive the best quality ownership experience, please see below for important information and time sensitive details.

What to do right now

1. Print your receipt from your confirmation email that should have been sent to you after your purchase and put it up for safe keeping. If you do not have one, contact us at 1-877-755-9353. You will need this if anything should ever happen for original owner verification (if bought as a gift, original receipt will still be needed, or explanation sent to Everlast).
2. Read this manual! A large number of tech and service calls are a result of not reading the manual from start to finish. Do not just scan or casually peruse this manual. There are different features and functions that you may not be familiar with, or that may operate differently than you expect. Even if you have expertise in the field of welding, you should not assume this unit operates like other brands or models you have used.
3. Carefully unpack and inspect all items immediately. Look for missing or damaged items. Please report any issues within 48 hours (72 hours on weekends or holidays) of receiving your product. Take pictures if you are able and contact us at 1-877-755-9353 ext. 226 if any issue is discovered. If outside of the US, contact your in-country or regional distributor directly at their service number.

What to do within the next 2–3 days

1. Make sure your electrical system is up to date and capable of handling the inrush and rated current of the unit. Consult and use a licensed and knowledgeable electrician. If you have downloaded this manual in expectation of delivery, get started now.
2. Make sure this machine is plugged in, turned on, and tested with every process and major feature, checking for proper function. You have a 30 day period to test and thoroughly check out the operation of this unit under our 30 day satisfaction period. If something is wrong, this policy covers shipping on the unit (30 day satisfaction policy applies to the USA only for the 48 lower states and D.C.; territories are excluded) or any incidental parts that may be needed to resolve any issue. After this 30 day period, if you find something wrong with the unit, you will not receive the benefit of free shipping back and forth to resolve this issue. Your unit is still covered under the 5 year parts/labor warranty, but shipping is covered by the customer after the 30 day period is over. The first 30 days of operation with any electronic item is the most critical and if any issue will happen, it will often happen during this time. This is why it is very important that you put this unit to work as soon as possible. Any issue should be reported within 48 hours (72 if on the weekend or holiday). Everlast will not be liable for any shipping after that time.

What to do within the next 30 days

Visit our website (US customers). Go to www.everlastwelders.com. Navigate to the resources tab and to the “product registration” page to register your product. While keeping your receipt/proof of purchase is still required for verification of ownership, registering will help us keep your details straight and establish a chain of ownership. Don’t worry, though, your warranty is still valid if you can’t do this. Remember: always keep your receipt even if you register. You may want to staple a copy to your manual.

What to do if you have a warranty issue or problem with the unit

1. Unplug the unit. (Also do this before any maintenance or cleaning is done.)

2. Do not attempt a self-repair until authorized by an Everlast representative. This does not include performing routine maintenance such as point gap adjustments or regular internal cleaning. Any third party repairs are not covered under warranty, and can further damage your unit.
3. Within 24–48 hours (or by the next working business day) you must contact U.S. tech support at 1-877-755-9353 ext. 226. Although phone contact is preferred to establish a warranty claim, you may send an email to tech@everlastwelders.com along with your contact information and a brief explanation of the issue and ask for a follow up call. If you contact us via phone, and you do not reach a live person, please leave a brief message with the nature of your problem and your contact information. You should expect a call back within 24 hours. It is also a good idea to follow up the message with an email.
4. Be prepared with as much information as possible when you talk with a tech advisor, including details of the failure, settings, and application of the unit. NOTE: A Proof-Of-Purchase (receipt) is required before returning the unit for warranty or before warranty parts can be sent to you.
5. Keep in mind that you may be asked to check a few basic things. Before you call, having a screwdriver and volt/ohm meter at hand is a good idea and will save time. Many issues can be resolved over the phone. If the issue cannot be resolved over the phone/email, you may be given an option to return the unit, or have a part shipped to you, at Everlast's discretion. Keep in mind, you may be asked questions that seem basic, or elementary to your knowledge base. These are not meant to question your knowledge, but rather to make sure nothing is overlooked. However the tech chooses to proceed, please cooperate with the process, even if you think you know what the cause or issue is. You may be asked to check something or open the unit during the diagnosis. **This does not void the warranty!** Opening the unit is a part of routine maintenance and cleaning. This is an important step. The willingness of the customer to work with tech support can save lots of time and accelerate the warranty process. For warranty to be honored, you will need to make sure that you follow these guidelines. Units that are returned without an RMA (issued by the tech support department) may not be repaired under the warranty agreement and you may be charged for the repair, and it can result in a delayed repair as well.

What to do if you need setup help, guidance, weld issue diagnosis or have general product compatibility questions

Call us at 1-877-755-9353 ext. 226 for welding guidance and general welding issue diagnosis, or email tech@everlastwelders.com with the basic issue you are having, along with your specific settings and welding application.

Hey... wait, what is my warranty?

Warranties and service policies and procedures vary from country to country and are maintained and supported by the regional or in-country distributor of Everlast welding equipment.

USA customers only: for full details on the 5 year parts and labor warranty, 30 day satisfaction policy, terms of sale, and how to proceed with a warranty claim, please visit: https://www.everlastgenerators.com/standard-warranty. Accessories are covered by a separate warranty and detailed information can also be found at the link above.

Who do I contact?

USA Technical Support: tech@everlastwelders.com · 1-877-755-9353 ext. 226
USA Sales and Main Office: 1-877-755-9353 ext. 201
Parts: 1-877-755-9353 ext. 206
Everlast Power Equipment, 380 Swift Ave., Unit 12, South San Francisco, CA 94080, USA

Other Countries and Regions: Visit the U.S. Website @ www.everlastwelders.com and click on the flag of the country or region represented that is closest to you. If your country or region is not found, call the U.S. office at 1-877-755-9353.

03 General Information & Specifications

Generators, duty cycle, 312i vs. 312i Pro, specifications.

Important Information: Operating this unit with a generator or other off-grid service.

This welder should only be operated on a generator certified by its manufacturer to produce clean power. Clean power is equivalent to the quality of household or shop/garage type power. This means the generator must have 5% or less total harmonic distortion (THD) of the Sine wave. If you are unsure of the power output type of the generator, contact the manufacturer of the generator for verification. *Do not operate on square wave or modified square wave generators or converters/inverters or damage or malfunction may occur. Damage caused by running this welder off of "dirty" power or modified sine waves may not be readily apparent and is usually cumulative in nature. However, damage may present itself immediately. The damage caused by running this welder on "dirty" power usually leaves internal tell-tale signs and damages specific parts.*

When operating on 240V 1 phase generator power, you will need a minimum size of 12,000 Surge Watts. Ideally, it is recommended for use with 13,000 Surge Watt generators or larger. Operating the unit on under-powered generators and/or on generators not rated with 5% or less THD can damage your unit. *The generator manufacturer determines this rating, not Everlast.* Do not assume that a name brand generator, or a "new" generator provides clean power. Price paid does not guarantee a clean power output either. There are multiple brands at various price points capable of producing clean power. Investigate this before purchasing a generator. The manufacturer will usually state that a unit is clean power in the advertising information and will state actual THD. If the manufacturer does not state it, contact the manufacturer directly for actual THD.

Operation of this unit with a generator not stated to provide clean power (5% or less THD) by the manufacturer of the generator is prohibited and will void the warranty. Use only with generators/inverters/converters that produce an equivalent type of sine wave used in shops, homes and "shore" type systems. Do not use with any off-grid power delivery system that produces more than 5% Total Harmonic Distortion (THD).

WARNING! Do not start or stop the generator with the welder switched on. Never use the generator in ECO mode or an auto-idle mode. Even with a clean power rated generator, this action can damage the unit. *Turn on the welder only after full generator R.P.M. has been achieved and the engine is sufficiently warmed up.* Closely monitor generator fuel level so that the engine R.P.M doesn't drop or completely shut down with the welder plugged in. For best practice: do not start or stop the generator with this welder plugged in, even if it is turned off. Unplug the welder before shutting down the generator.

If using with a welder generator, make sure the manufacturer has determined that the generator portion produces a clean sine wave. Many older models do not. Some newer models use "divided" power between welding and generating and cannot supply the full power to the welder unless the fine current control knob is turned to maximum. Do not use this unit with such welder/generators unless the Power/fine current control is turned to 100%. Some welder generators do have a separate alternator for generating power. If this is the case, do not weld or load the generator on other circuits while this welder is in use.

WARNING! Always make sure any generator or welder generator is properly grounded, according to local code and manufacturer's instructions. Ground the machine per the generator manufacturers instructions to meet code. Improperly grounded generators may damage the machine and more importantly may cause severe injury or death. Damage resulting from improperly grounded generators is not covered under warranty.

Single Phase 240V Operation:

This unit is rated for use with single phase 240V input. However, the unit may be used with single phase 208V if the voltage does not drop below 206V. If using this unit on 208V, duty cycle and displayed wire feed speed accuracy. Accuracy and helpfulness of the Powerset function settings may also be affected. Rated and Inrush Amperage will rise proportionately as well. If you decide to use this machine on 208V, before installing permanently, have an licensed electrician monitor voltage fluctuations, particularly under load and during peak use times. If the voltage remains constant, and steady without dropping below the 206V threshold, this unit may be used. Damage caused by using on undervoltage power sources is not covered by the warranty. Always be aware of the voltage output and the quality of the power source being used.

NOTICE

Breaker Sizing and Wiring Requirements

Before installation of this unit in any facility, always consult a licensed local electrician familiar with the requirements of properly wiring a welder into the electrical supply. Refer to the National Electric Code (NEC) and local codes. If needed, refer the electrician to Article 630 of the NEC during consultation to determine proper application and wiring needs. Use the I_{1MAX} and the I_{1EFF} ratings listed above to determine the proper breaker and conductor (wire) sizing required. Everlast welders are designed around use in industrial wiring applications and are intended to be used with modern electrical systems. Household wiring may need to be upgraded before this welder may be installed.

The ratings and methods in the NEC for wiring single phase 240V welders are different from wiring common household 240V equipment/ appliances. Please see information in this manual or use the data/specification information found printed on the side of the welder for official values.

WARNING! Do not modify the welder wiring. This unit meets the standards for conductor sizing on the power cable and takes into account power cable length, duty cycle and rated current.

Duty Cycle Information and Explanation

Duty Cycle is defined per North American Specifications as the amount of time out of a 10 minute period in which the unit can operate when tested at 40° C (104° F). For example, this unit has a stated duty cycle of 40% at maximum output. That means that the unit can be actively welding for at total of 5 minutes out of a 10 minute time period at the maximum output of the welder (315A MIG, A TIG and 220A Stick output). Everlast uses a maximum output rating to figure duty cycle on this unit. A duty cycle of 50% is considered to be a commercial duty cycle class welder and is suitable for daily commercial use for light to industrial manufacturing and production welding. Reducing the output of the machine will increase the duty cycle if all environmental factors are equal. Lowering the ambient air temperature and relative humidity will also help to increase duty cycle somewhat.

The duty cycle rating of this welder is tested at an ambient temperature of 40°C (104° F) to ensure conformance to the North American Standards. Operating the welder above this temperature point, or in extremely humid conditions, or while obstructing free flow of air in and around the unit may reduce the duty cycle of the welder. Additionally dirty units may suffer loss of duty cycle. As indicated previously, under normal conditions, the duty cycle will increase somewhat as ambient air temperature drops so long as the unit has access to clean, dry air. Free flow of air around the unit is critical to maintain duty cycle. Additionally, operating on lower voltages than rated may also affect the stated duty cycle.

The welder's duty cycle is not actually limited or controlled by a timer. Nor is it required to manually tabulate use time while welding. Rather than a timer, the welder is equipped with a heat sensor located on a heat sink near the critical power components of the welder. The sensor circuit is designed to interrupt the welding output of the welder if the unit overheats and exceeds the factory-set maximum operating temperature. If the operating temperature of the unit is exceeded, welding output will stop and an over-temperature warning light/error code will be displayed on the panel. The unit will continue to run the fans and act normally except no welding output will be allowed until it cools below the trigger threshold. If a duty cycle event is registered, do not switch the unit off! Allow the welder to continue to run at idle for at least 10-15 minutes until the temperature has fallen enough to reset the sensor and over-temperature warning light. *Even if the unit resets, allow the unit to cool for a full 15 minutes, or the duty cycle will be quickly triggered again since the unit resets just below the set temperature threshold.* After 15 minutes of cooling, you may switch the unit off if you are finished welding. If the unit does not automatically reset after 15 minutes, turn the unit off. Wait for 15 seconds before turning the machine back on. If the unit does not reset, contact technical support for further advice and assistance. As a best practice, when you have completed all welding activity and have been welding continuously for extended periods of time at moderate to high Amperages, keep the welder switched on for an additional 10 minutes without actively welding to allow it to cool.

The intentional and/or repeated triggering of the duty cycle protection feature on this unit will shorten the lifespan of the unit's electronics and can weaken internal components. The effect of overheating your unit repeatedly takes a cumulative toll on the welder. and can lead to early failure of internal components, guns and torches.

⚠ WARNING



This unit is not designed for Air Carbon Arc Gouging or Cutting. Do not this unit for this application.

⚠ WARNING



Any Carbon-Arc use will instantly void the warranty! Do not be tempted to use Carbon-Arc Gouging or Cutting under any circumstances, regardless of the size or diameter of the gouging electrode.

NOTICE

This manual has been written to guide the user in safe operation of the Cyclone series MIG/ DC Lift TIG/Stick welder. Due to Everlast's continual effort to improve and advance the design of the Cyclone series, units currently in production may have updated designs and programming improvements not found in earlier production models. Older models may not always be updateable without returning the units for major service (at customer's expense). Additionally, if an update is ruled to be possible, this is not considered to be a part of warranty work and is not eligible for return/exchange, unless it is an update designed to address and to correct a critical malfunction of the welder. *Some functions and specifications, not significantly affecting overall appearance or operation of the welder, may change from time to time without notice. Everlast holds no obligation and offers no promise, guaranty or any form of assurance to the customer/user to update older units to newer programming, features, accessories or styles found on subsequent model updates and releases, except those deemed by Everlast to be warrantable items related to welder malfunction or inadequate performance.*

What is the difference between the Cyclone 312i and 312i Pro?

There are a lot of similarities between the standard Cyclone 312i and the Cyclone 312i Pro model. In fact, they both share the same basic specifications, operation and internal design. Th Both are commercially capable units designed for industrial welding and manufacturing. The main difference is the intended application. The 312i, at time of publication, includes a spool adapter for smaller 8" rolls which is optional on the 312i Pro. The Pro version comes with a full set of common sized drive rolls and type while the standard model offers additional drive roll sizes beyond the .035"-.045" drives rolls as an option. The Cyclone 312i is considered a "table top" model which means that there is no built-in cart or undercarriage with a cylinder holder. The welder must be picked up by its handles and carried around or installed on a separate cart for portability. The Cyclone 312i Pro has a built-in undercarriage with wheels and cylinder rack which allows it to be a self-contained roll around unit. Both are still relatively compact and both are great choices, depending on the application. There are some shops where either may be a perfectly sound choice.

However, each style has it's own set of benefits. See below when considering which one to select.

1. The Cyclone 312i works well in space conscious environments, where any extra room is at a premium. This welder can sit on or under the work bench. It's a good choice for small garages and shops or manufacturing lines where welding will be confined to a smaller area or installed on a swinging arm.
2. The Cyclone 312i, while a little larger than some table top units with much less power, still can be picked up and put into a service truck with relative ease. This works well where more power is needed on a job site. It's a good choice for portable repair operations or where more powerful MIG welder may be needed on the job-site.
3. The Cyclone 312i can be installed on the optional PowerCart 375LF if the need arises. This cart allows more items and accessories to be stowed on the cart below the welder. However, when installed on the cart, the unit will sit higher than the Cyclone 312i Pro, making it a little less stable on uneven surfaces or on ramps. It does give taller users better access to the machine controls. It's a good choice if maximum flexibility is needed in the work place, especially places where the unit could used in both portable operations and back in the shop.
4. The Cyclone 312i Pro's undercarriage is built into the machine and includes a cylinder rack and cylinder holders which accommodate different cylinder sizes. The large wheels easily roll over small bumps and imperfections in the shop floor surface while keeping the unit the gas cylinder. This unit works well in shops that need a welder throughout different points in the shop during the day. This is a great choice wherever the unit must be used with the gas cylinder nearby and no provision is made for a cylinder wall mount. It eliminates the trip hazard posed by having an extra required gas line laying on the shop floor. **Gas Cylinders should always be chained or mounted securely to a wall, fixed post of sufficient size, or properly mounted on a cart for safety. When not in use gas cylinders should be capped and stored in a secure cage. Free standing gas cylinders should never be allowed or used in a shop or vehicle.**
5. The Cyclone 312i Pro is still relatively small and portable in a shop. It's smaller than traditional transformer welders of similar power. But for people that need the in-shop portability that need to roll the welder into clearance limited positions, this unit is a good choice.
6. The Cyclone 312i Pro provides a more traditional look and feel for users who are used to having larger welders around the shop and have their shop setup for this type of welder. While up to 20% smaller than some competitive models from other brands, the Cyclone 312i Pro is a good choice for users that want that roll-around convenience.

Product Specifications (Continued on next page)	
Welder Base Construction Type	Digital IGBT Inverter-Based Design with 5" HD (720) Screen. (Full Diagonal Measurement)
DC Processes	GMAW, FCAW, SMAW, GTAW (MIG, Gasless Flux-Cored, Gas Shielded Flux Cored, DC Stick, DC TIG)
Input Voltage/ Hertz/ Phase	240V (± 10%) 50/60 Hz 1 phase
I1 Current Rating (Inrush Amps) MAX	64A
I1 Current Rating (Effective Rated Amps) EFF	38A
OCV	MIG: 70V Stick: 70V DC TIG: 70V
MIG Duty Cycle @ Rated Output (Rated a 40°C/104°F)	40% @ 315A/ 29.8V 60% @ 250A / 26.5V 100% @ 200A/ 24V
TIG Duty Cycle @ Rated Output (Rated at 40°C/104°F)	40% @ 275A/ 21V 60% @ 250A/ 20V 100% @ 200A/18V
Stick Duty Cycle @ Rated Output (Rated at 40°C/104°F)	40% @ 250A/ 30V 60% @ 200A/ 28V 100% @ 160A/ 26.4V
MIG Wire Feed Speed Range (WFS)	60-600 IPM /.5-15 M/M
Installed MIG Drive Roll Sizes/ Types	Stock: .035"-.045" (.9-1.2mm) V groove (solid steel and stainless wire)
Programmed Wire Sizes *See Notice at end of Product Specification for more details.	Steel/Stainless: .024'',.030'',.035'',.040',.045"'(0.6,0.8,0.9,1.0,1.2mm) Aluminum: .030'',.035'',.040",.045'' (0.8,0.9,1.0,1.2mm) Flux-Cored: 030'',.035'',.040',.045"'(0.6,0.8,0.9,1.0,1.2mm)
MIG Output Range V/A (DC)	30-315A/ 15.5-29.8V
TIG Output Range V/A (DC)	10-315A/ 10.4-22.6V
Stick Output Range V/A (DC)	10-250A/ 20.4-30V
TIG Start Type	Live Lift with TIG rig (gas valve torch, no amp control except on panel)
Pre Flow / Post Flow Gas Time	MIG: PREFLOW: 0-10 S; POSTFLOW: 0-30 S TIG: Manual Control with Gas Valve
MIG Start/End Wire Feed Speed (WFS)	60-600 IPM/ .5-15 M/M
TIG Start Amps (Initial); End Amps, (Crater Fill)	None
TIG Remote Functions	None, Lift with no remote switch or pedal control.
MIG Remote Functions	2T, 4T
MIG Upslope/ Downslope (Ramp up/Ramp Down WFS)	UPSLOPE: 0-1.0 S DOWNSLOPE: 0-1.0 S
TIG Upslope/ Downslope (Ramp up/Ramp Down Amp)	None
TIG Pulse Frequency Hz	None
DC TIG Pulse Wave Form Shape	N/A
TIG Pulse Time On (Pulse Duty Cycle)	N/A
TIG Pulse Amps (Background Current)	N/A

MIG Spot Timer (Arc on time for Spot welding)	.1-10.0 S (adjustable in Tenths) Notice: User must turn on Spot function to utilize Stitch function.
MIG Stitch Timer (Arc off time between Spot welds)	0-10.0 S (adjustable in Tenths) Notice: User must set to 0 to turn off activity of the Stitch function.
Stick Arc Force Control	0-100% over set Amperage. Limited to the maximum available overhead current.
Stick Hot Start Amps (Intensity)	0-100% over set Amperage. Limited to the maximum available overhead current.
Stick Hot Start Time (Duration)	0-2.0 S (adjustable in Tenths)
Anti Stick Function (Stuck Rod)	Yes. Lowers current output when rod is stuck for easy removal.
Stick E6010 or EXX10 Capable (Cellulose Type)	Yes, with E6010 selected. (6011, 6013, 7018 rod selections also available for selection)
Memory Function	Save up to 30 Programs with lockable settings. Each program can be individually named.
Standard MIG Gun Type/Length/Connector Type	36 series 10 ft (3m) with Euro Quick Connect.
Optional TIG Torch Type Connector Type	NOVA Rigid-Neck 17 Gas Valve Series Air Cooled, DINSE 35/50mm2 (1/2" nominal lug diameter)
Optional MIG Guns Supported	NOTE: To accommodate the maximum capability of the welder, the 36 series is designed for Heavy Duty Spray Arc Transfer with .045" and .062" Steel wires. For wires smaller than .045", a blue liner must be purchased in addition to the stock liner on the stock 36 series (320A for Spray Arc) or the smaller, optional 24 series gun (250A Short Circuit/Spray Arc) or a 15 series (200A short circuit). For use with aluminum, a polymer/PTFE liner must be used in the guns to feed properly. 4043 may not feed well. 10 ft. (3m) maximum length is recommended with wires .030" and smaller in diameter. 10 ft. (3m) also can be used with most aluminum wires. Using longer guns with all aluminum wires .035" and smaller may cause erratic feeding.

Product Specifications Continued

Product Specifications Continued	
Spool Gun/ Push Pull Gun Options	Spool Gun: DSP360 Push/Pull Gun: North MPG 300A
Wire Jog function	Yes
Gas Purge Function	Yes
Work Clamp with Cable Length	300A, 9.5 ft. (2m) DINSE 35/50mm2 (1/2" nominal lug diameter)
Stick Electrode Holder Length	300A, 9.5 ft. (3m) DINSE 35/50mm2 (1/2" nominal lug diameter)
Power Cable Length	6.5 ft. (2m)
Power Plug Type for Single Phase Operation	NEMA 6-50P (Standard 240V Welder Type, 3 Wire in North American Markets Only.)
Cooling Method and Type	Fan with full-time operation.
PowerSet Mode (Synergic Assist for User Setup)	For MIG, TIG and Stick modes.

Rapid Adjustment Function	During parameter adjustment, press in on the adjustment knob responsible for adjusting/controlling the parameter value and the parameter will be adjusted in larger increments (Amps x 10, Seconds x 1.0, % x 10 etc.)
On-Screen/In Menu Unit System Selector	Display outputs all measurements in either the Metric (SI) system or in the Imperial System (English/US). Select from the on screen menu MET (METRIC) or IMP (Imperial) to change units of measure. All speed measurements, diameters and thicknesses will be changed and displayed in the user selected unit system.
Dimensions with Handles installed (installation optional)	312i: 20.1" H X 11.9" W X 28" L (510mm H X 300mm W X 710mm L) Includes handles and fittings stickout. 312i Pro: 30.7" H X 14.9" W X 42" L(780 H X 380 W X 1068 L)
Display Dimensions and Type	5" (127mm) Diagonal Measurement. 1280 × 720 (720P) High Definition TFT Full Color LCD.
Weight (Bare Unit)	312i: 68 lbs. 312i Pro: 105 lbs. (may vary depending upon final configuration)
Ingress Protection Rating	IP21S
Operating Temperature Range	14-104°F/ -10-40°C (If operated higher than 104°F/40°C then duty cycle will be lowered significantly.
Recommended Welding Cart (Optional) for 312i only	PowerCart 375 LF

NOTICE

The programmed wire sizes are used to calibrate and improve machine performance in manual and PowerSet modes. This is required to ensure best performance for the wire. Not all wire diameters provided in the program will be easily found locally. This machine is designed to operate in many regions of the world and will have extra wire diameter and type selections that may not be readily available at some local welding supply stores. To utilize all settings, additional drive rolls, guns and liners will be required.

NOTICE

This unit supplies DC Lift Start TIG with control of gas flow through the optional torch's gas valve mounted on the handle. DC TIG is suitable for welding most metals except Aluminum and Magnesium. In MIG mode a spool gun or push pull gun or stock gun with a polymer liner and U groove drive rolls can be used to weld aluminum.

NOTICE

This unit is not shipped with any default settings or saved programs, with the exception of the preset PowerSet programming. Any saved programs or settings entered into the machine on initial startup should not be construed to be "factory settings". The settings and programs that may be entered into the unit are a result of a series of tests performed on the unit during final inspection. The unit is designed to automatically save the last setting used in each process. These units are both live and stand tested for quality control. Additionally the units go through a "burn in" period at which some functions may be activated or tested. The last test configurations performed may not allow the welder to create a useable weld.

04 Installation & Power

Unpacking, assembly, inspection and connecting to the power source.

Getting Started

UNPACK THE UNIT.

Upon arrival, you will need to completely unpack your unit, and check things over. This is a time sensitive matter. Do not delay or hold the welder unopened in the box. First, make sure the unit is opened from the top. Be careful with using knives and sharp objects so you won't cut cords and cables inside the boxes. Lay all items out and inspect them.

You should have the following in your box:

1. MIG/DC Lift TIG/Stick welder. (Cyclone 312i or 312i Pro)
2. 36 series MIG gun 10 ft. (3m).
3. 300A Stick electrode holder (approx. 9.5 ft with cable).
4. 300A Work clamp (approx. 9.5 ft with cable).
5. Argon regulator, floating ball type with hose.
6. *Installed, not pictured:* 6.5 foot power cord with NEMA 6-50 Plug.
7. *Packed separately, not installed:* handles.
8. 12" to 8" spool adapter. (optional on 312i Pro)
9. 312i: .035"-.045" Drive rolls. 312i Pro: Drive roll kit
10. 312i Pro: Cage assembly, cylinder brackets, chains and wheel kit.





NOTICE

This unit features a lift start TIG function. However, this is only a basic form of DC TIG welding. No pedal or remote control can be used with this welder. The Tungsten will remain live continuously. An optional “TIG Rig” package should be ordered from Everlast if the unit will be used for basic DC TIG welding. The TIG Rig setup requires the use of a gas valve torch since a separate gas solenoid is not provided internally to control gas flow. The TIG start type is a basic type lift start with a live lift function where the Tungsten remains live while connected. No pulse is provided. If this is to be used with the TIG process function, the MIG torch must be disconnected from use. Similarly while using the MIG process, the TIG torch must also be disconnected from use. Leaving the other process torches connected can result in damage to the unit and accidental arcing and possible injury.

Upon receipt of the package, immediately open the box to inspect the welder for damage. Check the general condition of the accessories. Some slight rubbing or chaffing of some of the accessories may be present. This is considered normal. Make sure everything is present and accounted for from the list above. If any item is damaged or missing, please inform Everlast within 72 hours of product receipt. See pages 4 and 5 for more details. Check all packaging, box corners and flaps for small items.

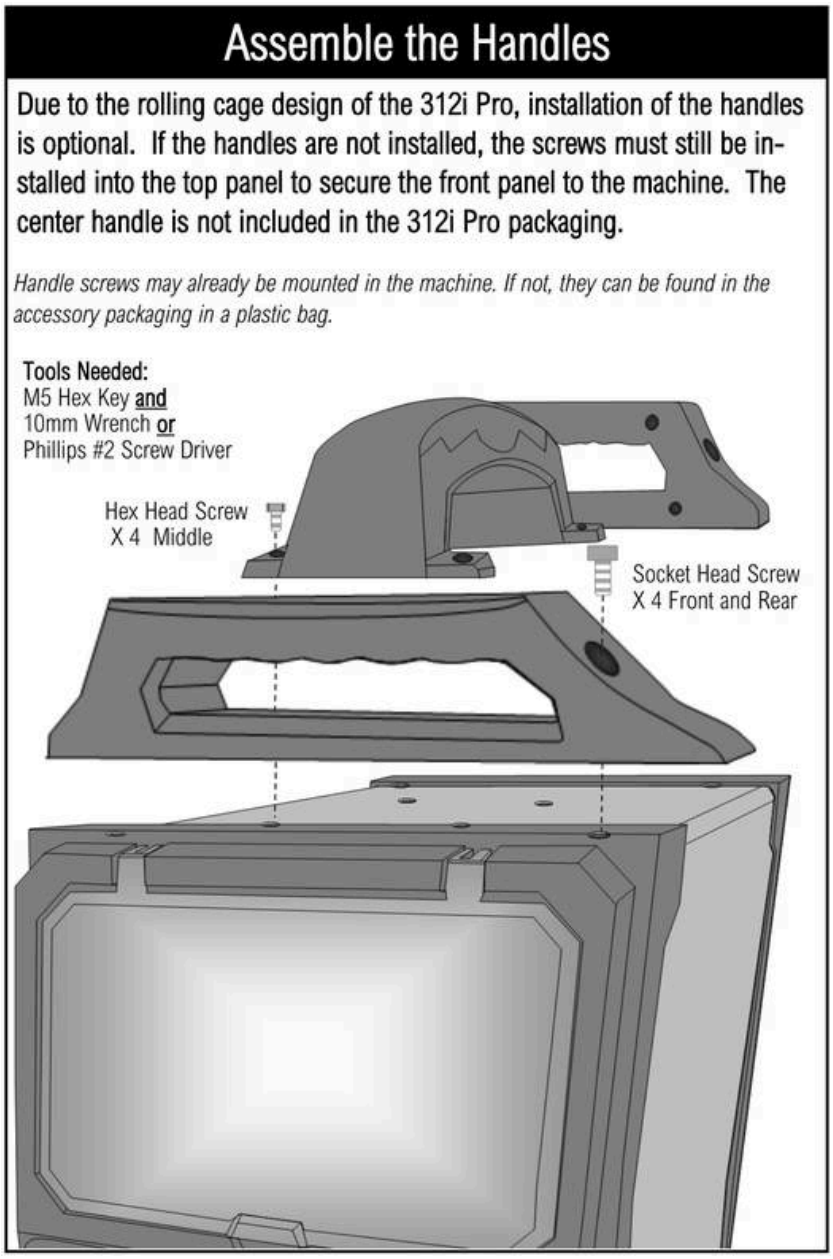

ASSEMBLE AND MAKE THE UNIT READY FOR USE.

For the Cyclone 312i: Assemble the front, middle, and rear handles with the supplied screws. Do not overtighten. Handle assembly is optional for some non-portable and space limited applications, but all handle screws must be installed in the panel even if handles are not used. Carry the unit by the handles. *Screws are usually found pre-mounted in the case.* Remove the factory installed plastic sheeting covering the LCD Color screen. The sheeting must be removed to prevent permanent adhering to the screen and subsequent damage to the screen surface. For maximum screen protection, install a cut-to-fit screen protector (customer supplied) on the screen before use. This should be changed once every six months for best screen protection.

For the Cyclone 312i Pro: Follow the handle assembly and prep instructions for the 312i as shown..

Notice that no middle handle is used on the 312i Pro since it is designed not to be carried. The front and rear handles can be used as wrap points for accessories or push pull-points but since the unit also includes the outer cage which provides push pull points and wrap points for cables, the handles may be omitted. However, the screws intended for the handles must be installed in the case to secure the front bezel. The assembly diagram with parts

and exploded view can be found as an addendum at the end of the manual, along with a step by step assembly instructions.

POWER UP AND TEST THE UNIT.

You will need to fully test the unit as soon as possible. Within 72 hours after delivery of the unit, be sure to have every thing you need at hand to test the unit. Make sure the correct input power, wiring, and receptacle configuration is used. Then, power up your machine without any accessories installed. Allow the unit to initially idle for 15 minutes. Check and observe operation of knobs, controls and keys, cycling through each as required . *Make sure the fan is operating via the control panel menu setting.* After the test is completed, turn the unit off, connect the accessories and recommended shielding gas(es) to conduct live testing. Test all of the functions and features of the machine. For testing and welding, make sure the work clamp is connected directly to the work (part being welded). Check for arc starting and stability. If problems are observed, contact Everlast for further guidance. See page 5 for more information.

NOTICE

NOTICE: Cosmetic damage claims made after 30 days will not be accepted. Unless Everlast is contacted and informed of such delay with legitimate reason for such a required for a delay (i.e. Overseas deployment or sudden disability) cosmetic claims will not be considered. Everlast determines what is considered to be a legitimate delay. Keeping the product in a box it is needed is not considered a legitimate delay.

CHECK FOR GAS LEAKS.

This unit has a gas connection on the rear panel. The connection should be tested after installing the regulator. Be sure to check for gas leaks before attempting to weld. You can best test this by first installing each torch separately.

For MIG: The process of testing MIG is similar except the MIG gun should be installed securely into the Euro-Quick connect base on the unit. The hand nut on the gun connector should be tightened and the gun connector should be gently wiggled and pushed in at the same time to check for secure seating. Retighten the hand nut on the connector. Do not use tools. Hand tighten the Euro– Quick connection only.

For TIG: The connection of the optional Gas-Valve TIG torch requires a direct connection to the regulator. The unit does not control gas flow. With this type connection, the TIG torch may be connected directly to the gas regulator with a variety of couplers and fittings that are customer supplied. This is the customer's responsibility. Everlast does not provide a full kit for this type connection. However, Everlast does offer quick connect male and female fittings that can be used to assist in coupling the torch directly to the regulator. Some locally sourced parts may still be required. This unit uses standard 5/8″ CGA inert gas fittings for the shielding gas regulator and rear of the unit. If the same regulator for MIG is to be used with TIG, then you will need to source a 5/8″ CGA female coupling and a 5/8″ CGA to-hose-barb adapter and matching tubing to use the quick connect setup available from Everlast. (Do not use the water cooler threaded adapter fittings. These are for adapting left hand threads on a water cooler.) Use either the red or blue 2 piece connector kit if desired to complete the connection.

DISTANCE YOUR WELDER FROM YOUR WORK.

As a best practice technique, be sure to locate the welder away from the immediate welding area. The fan found in your unit is powerful enough to create strong air turbulence in the weld area. When the fan cycles on, it can disrupt the even flow of shielding gas around your weld which will create unstable arcs and porous welds. The final result will be a poor weld. If possible, the welder should be located at least 6 feet away from the weld area and should be placed on a different level to prevent weld porosity and defects being created by the welder's fan system. Keep in mind that air flow exits from both the front and sides of the welder.

GIVE YOUR WELDER SPACE TO COOL.

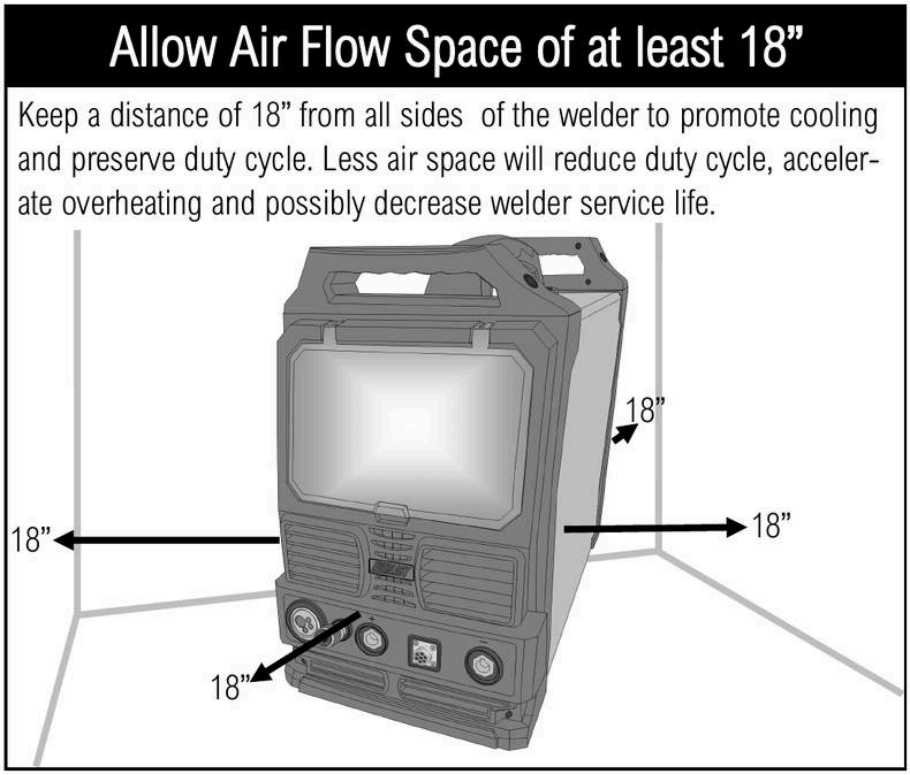

Maintain enough unobstructed space around the welder to allow free flow of air so that it can cool itself. Position the welder in a way that will allow 18″ from the front, back and sides to allow for proper air flow for optimum cooling. The welder pulls air in from the rear. It then pushes air through the unit’s internal heat sinks to cool the electronics. The air is then exhausted through the front panel and side louvers of the unit. If any side is blocked or restricted, the duty cycle will be reduced, leading to possible damage from chronic overheating. While the design of the Cyclone 312i Pro helps to maintain some distance from obstructions, care should be taken to still maintain the required 18″ of clearance. Items should not be shoved against the cage or the chassis of the welder while in use.

Never attempt to restrict air flow by attaching filters to the vents or altering the vents in any way. *Home-built carts need to allow free flow of air on all sides. Dividers and blocking plates should be avoided. Never place multiple machines side by side unless the proper air space is observed.*

CONNECT THE WELDER TO THE OUTLET.

NOTICE

The National Electric Code (NEC) under Article 630 has developed specific regulations for wiring electrical service for welding equipment. These rules are different than for other types of service such as a stove or dryer in a household or even in a commercial application. You need to consult and/or employ a locally licensed electrician before installing this unit to make sure all national and local codes are followed. If you are not qualified, do not attempt to wire any outlet or make any electrical power connections or related determinations of electrical code. Everlast is in no way liable for any damages caused by improper connection of this welder. As a rule, your welder should be on a dedicated branch circuit not far from an electrical disconnect box. It is very important that the welder not share circuits with other shop or household items. Do not attempt to adapt existing household circuits because conductor wire colors are different for welders. Additionally, only 3 wires are used for single phase welders. No neutral is used in a welder circuit. The white and black wires are used as conductors in a single phase welder service. A red wire is not used. *The input power cable and plug conforms to North American standards for size, length, with consideration given to inrush amperage, rated amperage and duty cycle. Do not modify, or attempt to rewire your unit. This will void your warranty.*

Your unit has been shipped with a NEMA 6-50P plug and 6.5 ft. (2m) cable installed on the unit. This is the standard type plug used for 240V 1 phase welders in North America. For single phase 240V connection, select a NEMA 6-50 Receptacle for operation with this unit. (Other regions/ countries vary). A neutral is not used. In a dedicated circuit, the wire wires supplying power (the conductors and ground) are black, white and green. A red wire, which is traditionally used as a “hot” leg (power conducting wire) of power is not present in a three-wire 240V wire circuit of a welder. From the panel box, the Black wire serves as L1(Hot), White serves as L2 (Hot) and Green serves as G (Ground). No neutral wire is needed, so white is often used as a “hot” conductor wire in this instance. It is recommended to either install a receptacle as close to the main panel as possible or install a subpanel cutoff as close to the outlet and welder as possible. Always follow local codes when making these connections. Do not share or piggy back another device anywhere on the circuit.

Operation with an extension cord is generally discouraged for several reasons. The first reasons are that it can pose a trip hazard, difficult to maintain and may not meet local regulations. The second reason is that extension cords are often a source of operational issues due to the tendency to undersize the cord. Due to the ability of this machine to run for extended periods of time at a relatively high Amp demand, a cord that is too long and/or undersized will overheat and cause voltage drop which will in turn can cause the welder to overheat. If an extension cord is required, operate the unit with no more than a 25 ft. cord if at all possible. The gauge of the extension cord, due to the length, must be increased in size over and above the gauge of the power cord. Do not match the extension cord to match the gauge of the power cord. The power cord has been properly sized for the length of the cord and the duty cycle of the machine. Extending beyond this length will require a heavier cord than what is installed on the machine. A long extension cord may ned to be increased by several gauges to prevent voltage drop and overheating. Consult an electrician or a reliable wiring guide to determine the gauge cord you need for the length of the cord that is used. Also note that many economy cords advertised online and sold in some retail outlets are smaller gauges than advertised. Operating on an undersized extension cord can damage your machine. This type of damage is not covered under the warranty.

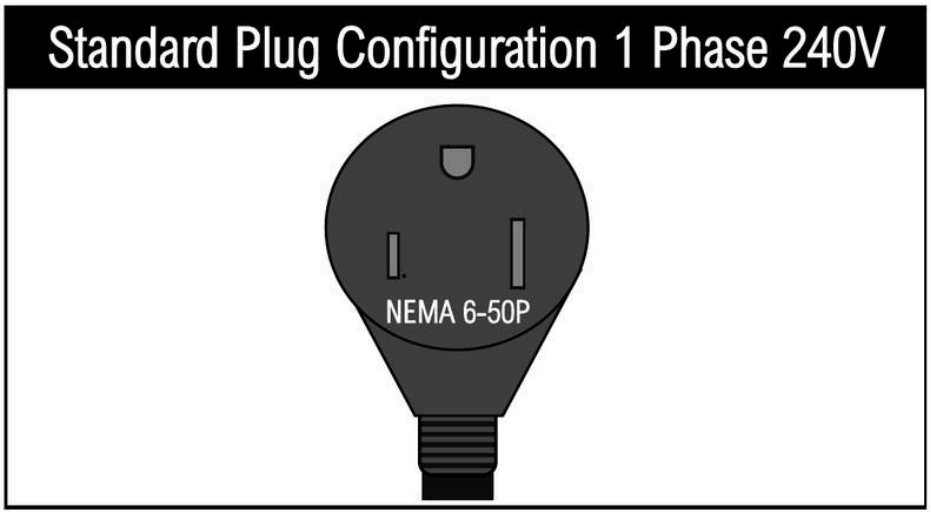

Selecting A Breaker and Wire Size

Select a breaker based off of the I_{1MAX} rating of this unit. This is the maximum inrush current of the unit. The inrush is not a sustained current. The I_{1EFF} rating of the unit is the maximum “rated” current of the machine. When combined with the length of the run from the main panel, this determines the conductor size needed to supply the welder, Refer your electrician to Article 630 and the specification page of this manual (or the specification grid printed on your unit) when selecting the correct breaker and wire size. Use a delayed trip breaker, or slow blow fuse.

Using with 208V 1 Phase

This unit may be operated with 208V service 1 phase service. However voltage should be checked under load before allowing permanent installation. Voltage should not fall below 206V or damage may occur to the unit. Most modern 208V service runs several volts above 208V and is not usually a concern. Older installations where service wiring may be degraded or not up to code may produce sub standard or low voltage not suitable for use with this unit.

05 Front, Rear & Control Panel

Component identification, PowerSet vs. manual operation and start-up.



Front panel

#	Component	Notes
1	Protective cover	Keep down during welding and storage.
2	Euro-style quick MIG connector	MIG gun, spool gun or push-pull gun. Only one gun at a time.
3	Positive terminal (+) DINSE 35/50, 1/2" nominal	Work clamp for TIG and for gasless flux-cored. Electrode holder for most stick welding.
4	7-pin control connector 5/8" GX16-7	Control cable of the spool gun or push-pull gun.
5	Negative terminal (–) DINSE 35/50, 1/2" nominal	Work clamp for MIG (not gasless flux-cored). TIG torch for all TIG welding. Work clamp for most stick welding.
6	Handles	Packed separately. Removable for low-clearance or fixed installations; reinstall the screws if handles are not used.

The 312i is shown. The 312i Pro has the same connections and controls; it adds the cage and undercarriage and is taller.

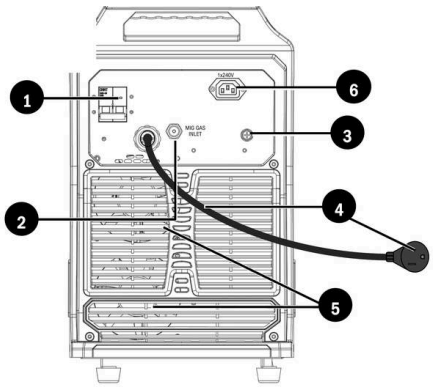

Rear panel

#	Component	Notes
1	Breaker / power switch	Main power and disconnect switch. If it trips and the welder shuts off, a serious internal event or switch failure may have occurred: remove the welder from service, tag it out, and contact technical support.
2	MIG gas inlet 5/8" CGA R.H.	From the regulator. Hose barb in other markets.
3	HF ground service bolt	Use only if needed to reduce electrical interference (see notice below).
4	Input cable, 6.5 ft, NEMA 6-50P	240 V 1 phase, 3-wire. Do not change or adapt the plug. Do not use both a neutral and a ground.
5	Fans	Run full time. Check periodically through the rear grill that they work and are clean; remove debris from the blades. Louder fan noise can mean build-up, a bad bearing or a damaged blade.
6	Water cooler outlet 240 V 1 ph, 4 A max	For Everlast 240 V water coolers only. Do not use 120 V coolers or any other device.

NOTICE

Notice — Electrical interference

If nearby lights or electronics are disturbed, connect the service bolt with 12-gauge copper wire, by the shortest route, to a dedicated copper ground rod driven into moist soil outside the weld area. Metal building frames and sheeting, tables, carts and racks can act as antennas; ground them to separate copper rods at 10 ft intervals around the building. Twist cords and welding leads together. Have a licensed electrician do this work. If interference continues, contact technical support.

Control Panel

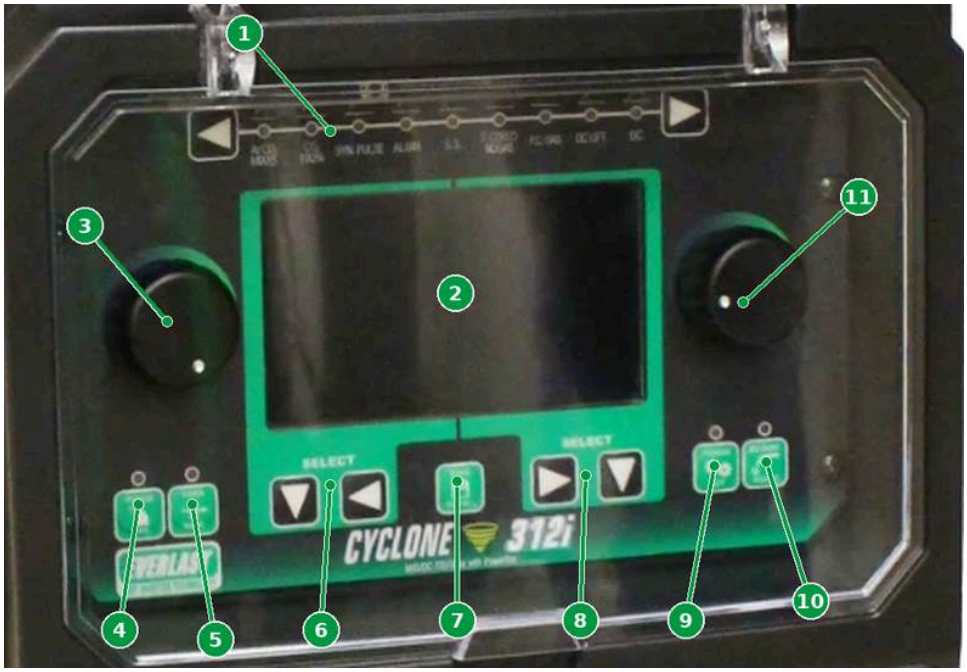

Control panel

#	Control	What It Does
1	Process selector	Left/right arrow keys move the LED to the welding process: Ar/CO_2 Mixes, 100% CO_2, Alum., S.S., F.C. No Gas, F.C. Gas, DC Lift (TIG) and DC (Stick). Press at a moderate pace; pressing quickly may make the LED appear to skip. Use the opposite arrow to go back.
2	5" HD color display	Divided into a left half and right half by a green line. Keep the flip-down cover closed when welding and when not in use.
3	Left knob	Adjusts parameters on the left half of the screen. Press in while turning for larger steps.
4	Purge gas key	Gas flows without pulling the trigger. The LED stays on until you press the key again. Turn purge off after use or gas will be wasted.
5	Wire jog key	Feeds wire without the trigger and without gas, for loading wire.
6	Left navigation keys	Down and left arrows select parameters on the left half.
7	Program save key	Short press: recall menu. Hold 3 seconds: save menu.
8	Right navigation keys	Down and right arrows select parameters on the right half.
9	PowerSet key	Turns PowerSet (synergic setup) on or off for the current process; the LED lights when it is on. Also locks/unlocks a program in the save menu.
10	E-Z Wire Run-In	Soft start: wire feeds slowly until the arc starts, then ramps up. Normally leave it on; turn it off for heavy tacking or spot/stitch work. With it off, starts are harsher and more spattery. With it on, wire jog still feeds quickly.
11	Right knob	Adjusts parameters on the right half. Also moves through the on-screen keyboard and program list.

Front Panel View*

* Cyclone 312i is depicted. The basic connection and control components of the 312i Pro are identical. The only difference is the surrounding cage, undercarriage and extra height.

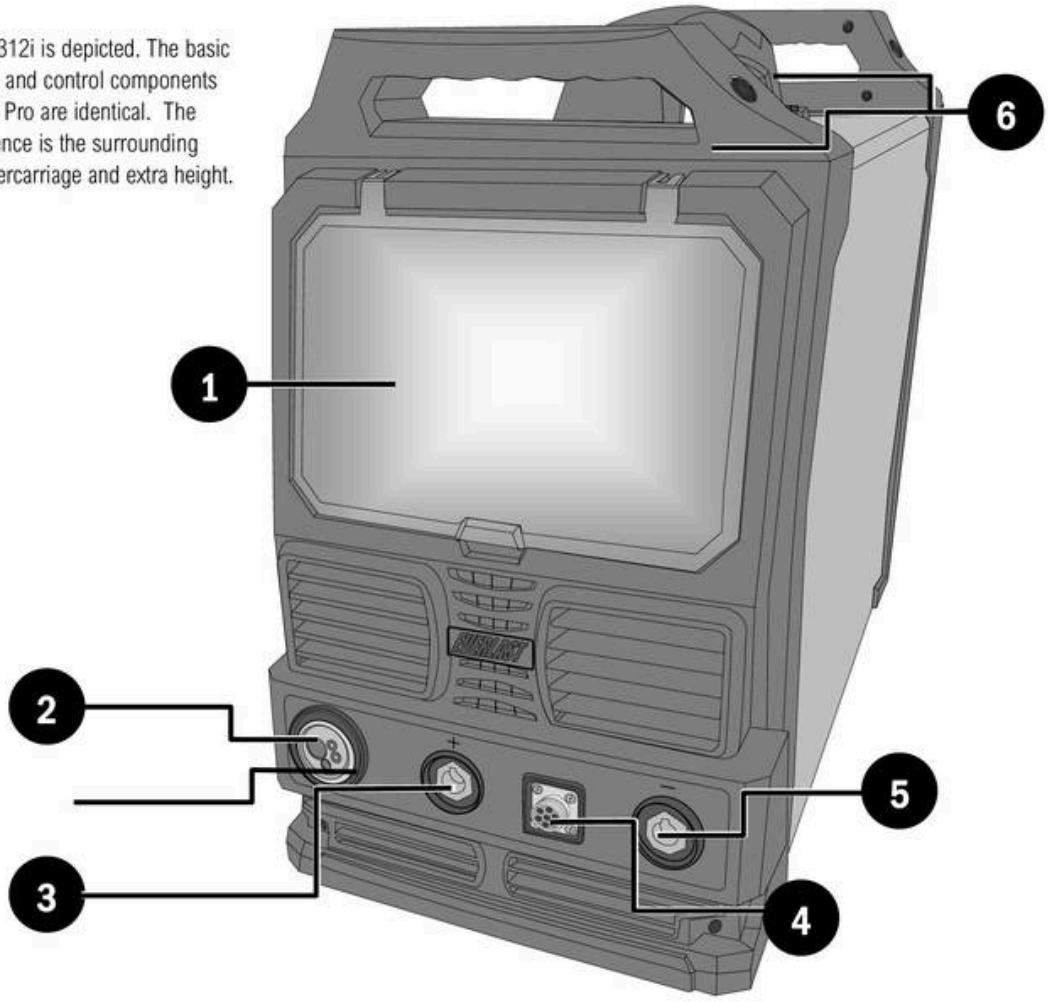

#	Component Identification	Function/Component Note
1.	Protective Cover	Keep cover down and in place during welding activities and while in storage.
2.	Euro-Style Quick MIG Connector (Only one gun may be connected at a time.)	Connect the MIG gun to this connector. Connect the Spool Gun to this connector. Connect the Push-Pull Gun to this connector.
3.	Positive Terminal (+) (DINSE 35/50mm2 Type, 1/2" nominal dia.)	Connect the work clamp to this terminal for TIG welding. Connect the work clamp to this terminal for Gasless Flux-Cored Welding. Connect the Stick electrode holder to this terminal for most DC Stick Welding.
4.	7 Pin Control Connector (5/8" Type GX16-7)	All torch switch and foot pedal connections attach at this point. (One at a time.) Ref. EV-PANA7-625-PLUG
5.	Negative Terminal (-) (DINSE 35/50mm2 Type, 1/2" nominal dia.)	Connect the work clamp to this terminal for MIG operation. (Not for Gasless Flux-Cored use.) Connect the TIG torch to this terminal for all TIG welding applications including AC. Connect the work clamp to this terminal for most DC Stick welding applications.
6.	Handles	The handles are packed separately in the box and are not installed. Installation is recommended, but the handles are designed to be removeable for low clearance or for some permanent mount applications. Be sure to reinstall screws in the cover and panel if the handles are to be removed or not installed.

Rear Panel View*

* Cyclone 312i is depicted. The basic connection and control components of the 312i Pro are identical. The only difference is the surrounding cage, undercarriage and extra height.

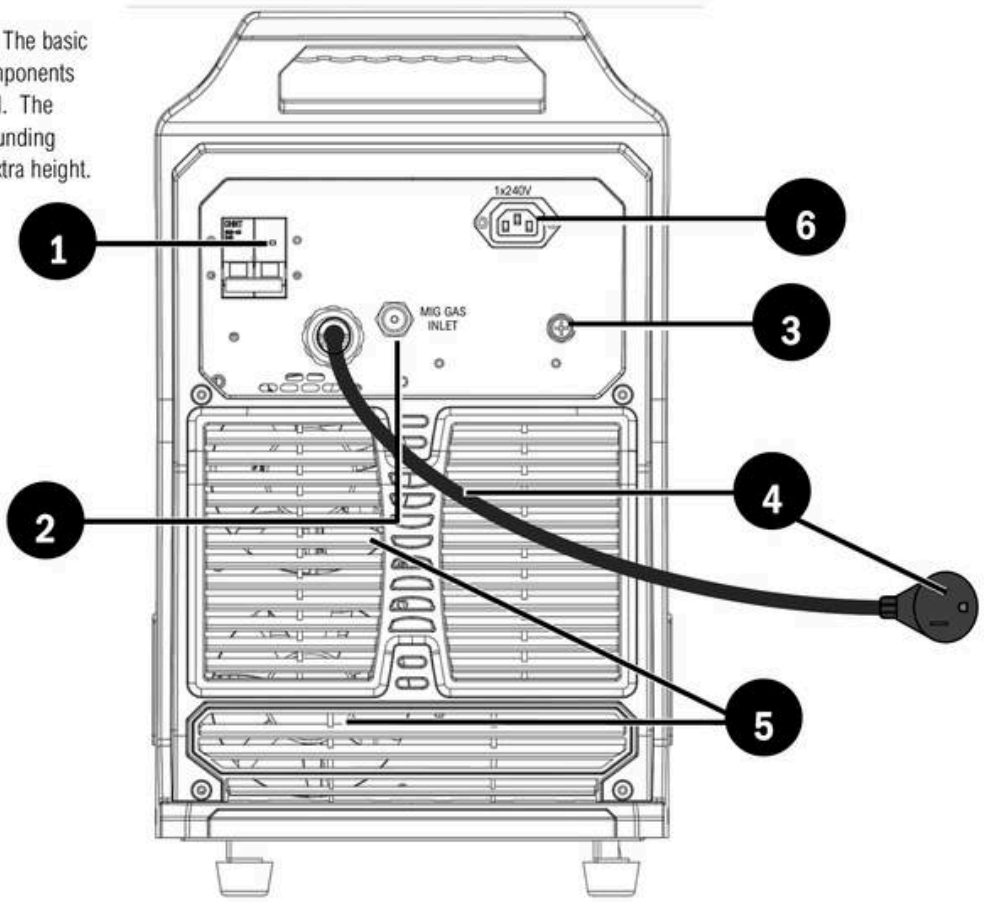

#	Component Identification	Function/Component Note
1.	Breaker/Power Switch	This switch doubles as the main power switch and disconnect switch. If this switch trips and the welder power turns off, a significant internal event or failure of the switch *may* have occurred. If this occurs, immediately remove from service and mark and tag as out-of service according to required work regulations and contact Everlast Tech Support for further diagnosis and/or repair options.
2.	MIG Shielding Gas Inflow Connector	*North America:* 5/8" CGA R.H. connector. Standard Argon/Inert gas type. *Other Markets:* Hose barb connection.
3.	HF Ground Service Bolt	This is to be used only if needed to mitigate any electrical interference that may be caused by the HF start or general operation of this unit. If disturbance in nearby electrical items such as lights and electronics is observed, this may be required. A 12 gauge copper wire should be connected to this terminal, and routed direct via the shortest route possible to a dedicated copper rod driven into moist ground outside the weld area. All metal items in the shop must be grounded to the outside at regular, multiple intervals, including any metal building panels. Consult a local licensed electrician to perform this connection if needed. If interference persists, after professional connection, or if your electrician has questions, contact Everlast Technical Support for further help.

4.	Input Cable 6.5 ft. with NEMA 6-50P Plug NOTICE: *Always consult national codes and employ a locally licensed electrician before connecting this welder to any new or old service.*	*North America only:* The unit operates on 240V 1 phase power. The unit is equipped with a 3-wire NEMA 6-50P plug. This is the standard welder plug used by all companies for 240V 1 phase welder use. The plug should not be changed or adapter for any other plug. North American codes and standards dictate that only 3 wires (Two Hot conductors and one ground) are used for 240V 1 phase operation of welders. A neutral wire is not used. Do not attempt to use both a neutral and ground with this unit. The ground should be properly grounded according to code and should not share a neutral buss bar in the panel.
5.	Fans	Periodically check the fans for proper function and cleanliness. These can be viewed through the rear grill section on the left side of the rear panel. From time to time, remove the rear panel and carefully inspect fan blades and remove all debris accumulated on blades to prevent unbalanced running and failure. Fans run full time to provide high duty cycle performance. If an increase in in the fan noise is noticed, this can be from build up on the fan blades, bad bearing or damaged fan blade.
6.	Water Cooler Outlet (240V 1Ph, 4A max)	This outlet is to be used with Everlast 240V rated water coolers only. Do not use with any other application. Do not operate with 120V Everlast coolers. Everlast coolers include the compatible plug for this unit.

Control Panel Layout



#	Component Identification	Function/Component Note
1.	Welding Process Selector	Press left or right arrow key connected to the process selector LEDs to navigate back and forth to select the desired weld process. The LED will light to indicate which weld process has been selected. See Quick Setup Section.

2.	5″ 720HD TFT Color Display	This display is designed to be clear and bright. It will provide long life if proper care is taken. Keep the flip down cover in place when welding and when not in use. Remove temporary, original protective film on the screen surface upon delivery. Use cut-to fit screen protectors as a replacement for future use. Do not use harsh cleaners. Use only screen type cleaners sprayed onto a damp, lint free rag to clean. Remove dust with short bursts of dry compressed air. Notice: The operation of the screen is divided into left half and right half sides. The left and right half are divided by a green line running down the middle of the screen on all adjustable pages of the menu. The left and right half are also highlighted further by the black extended line in the middle of the green surrounded area of the screen that groups right and left side controls.
3.	Left Adjustment Knob	This control knob controls all the parameter values found on left-half side of the LCD screen. It is used to increase and decrease the value. *Helpful Hint: Press in and turn to increase the parameter value in larger increments to save time.*
4.	Purge Gas Key	When selected, the Purge Gas function is designed to allow shielding gas to flow rate from the cylinder without having to use the torch trigger. Gas will flow when the button is pressed. The LED will illuminate until the button is pressed again to shut off gas flow. Be sure to turn the purge function after use or the gas will continue to flow and waste gas.
5.	Wire Jog Key	The wire jog function is designed to feed wire without pressing the trigger. This speeds up wire delivery when changing the wire spools out or loading the gun with wire. It prevents waste of gas while wire is feeding during this change process.
6.	Left-Half Side Navigation Keys	The left side down and left arrow keys are used to navigate and select the left side parameters for adjustment.
7.	Program Save Key	Use this key to both access the program save menu, lock/unlock a program recall a program. See Quick Setup Section. A short press will bring up the recall menu. A long 3 second press will bring up the save menu.
8.	Right-Half Side Navigation Keys	The right side down and right arrow keys are used to navigate and select the right side parameters for adjustment.
9.	PowerSet Key	The PowerSet key is used to activate the synergic programming of any welding mode. The LED will light to both confirm and remind the user that the PowerSet Mode is activated. Also used to lock or unlock a program in the save mode
10.	E-Z Wire Run-In	This is a “Soft-Start” feature which feeds wire slowly in the beginning to improve arc starting. When the LED is illuminated, this function will be on. The wire will feed slowly initially with the trigger pulled. It will ramp up speed as soon as the arc is established. In effect, this acts as a type of hot start by allowing more voltage to wire feed ratio to help reduce porosity at the start. While activated, the Wire Jog button can be used to feed wire quickly during installation or for wire run off. Normally, this should be on unless heavy tacking is being performed. Keep in mind with this turned off arc starts will be more violent and spattery. This also precludes the ability to manually calibrate and check wire feed speed since adjusting the wire feed speed will not affect the wire run-in rate.
11	Right Adjustment Knob	This control knob controls all the parameter values found on the right side of the LCD screen. It is used to increase and decrease the value. It is also used to select and navigate the pop up on-screen keyboard when naming the program or selecting a program in the recall mode.

PowerSet MIG vs. Manual MIG

The term “synergic” is applied by many manufacturers to a MIG welder which requires input of basic welding information to “automatically” provide the user with settings good enough to make a competent weld. The differences in industry in terminology, levels of input, and programming has led to confusion over what constitutes true synergic operation. The confusion is further complicated through the proprietary marketing of trade names.

As early as the 1980’ s, the term “Synergic” was applied to early, advanced pulse MIG welders to help distinguish them from manually set pulse MIG welders. In its original form, synergic operation incorporated a basic logarithmic formula to determine an appropriate ratio of volts to amps based off of certain inputs of wire diameter and type which allows a single knob control of simultaneously, reducing the need for trial and error. This helped the user to maintain good weld performance throughout the range of adjustment. As technology developed, synergic systems began to incorporate other user input variables such as plate thickness, joint design, travel speed and shielding gas. *Any welder that requires these or similar types of input variables to achieve a pre-programmed setting qualifies as being “Synergic.” With new advances in programming and digitalized control, the term “Synergic” can be applied to all welding and cutting processes.*

Everlast PowerSet is a “next-level” form of Synergic programming which incorporates color coded graphics and a limited adjustment range. Overall, it simplifies setup, reducing knowledge and training needed for accurate setup. The programming determines targeted settings by requiring the user to input wire diameter, type, and the thickness of the metal being welded. Many functions are preset or have graphics to assist in adjustment. Some functions that require a parameter to be precisely set in synergic or manual mode actually change format in PowerSet mode. *For example, the Start WFS function in PowerSet mode no longer requires the user to input a precise wire feed start value. Instead, it changes to require the user and is set to a default setting that works well in general situations.* However, some functions that may be desirable, such as Spot/ Stitch may also be eliminated.

Both PowerSet and full manual control modes have their own merits and which is best depends upon operator expectations and application. But they also both present their own set of requirements. Neither form of control eliminates a certain basic level of user responsibility. The user is still required to know the basic parameters of the weld, such as wire diameter, metal type, and thickness. Both require at least a base-line set of skills, knowledge, and to some extent, experience to properly set up the welder. In reality, there is no “auto sensing” welder that just allows the user to pick up the MIG gun or TIG torch that will determine all this for the user. *This welder is considered an advanced, professional level machine suitable for commercial use and should be treated as such by the user. Additional training and instruction may be required.*

Remember:

If there are parameter settings on the lower two lines, whether in manual or PowerSet modes, these should not be considered to be factory defaults. These settings typically require further adjustment achieve the best performance and weld quality.

PowerSet Control

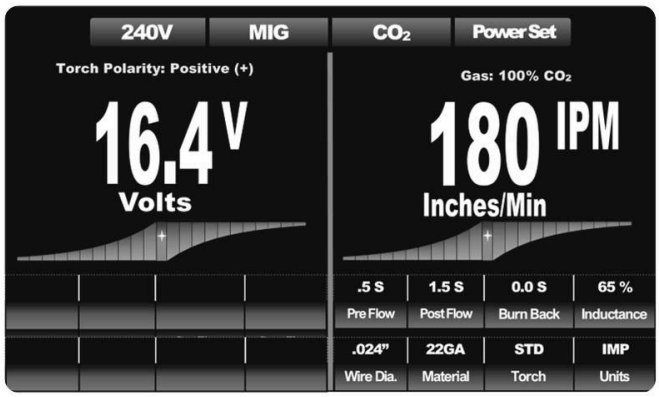

Pros:

- Easy, Fast Setup with presets and reduced operator input effort.
- Easier to train new users with shorter adjustment period.
- *Usually* gives the operator a useable setting of volts to Amps.
- Can be used by amateurs or professionals.
- Reduces operator error.
- Offers a limited but favorable amount of fine-tune adjustment.

Cons:

- Settings may not be perfect for all positions/applications/users.
- Presets may takes away from Pro user's ability to tailor the settings to individual needs or worksite applications.
- Need to know and enter exact specifics of wire type, diameter and metal thickness.
- Adjustments do not allow for all variations in position and joint design.
- Some functions eliminated such as the Spot/Stitch timer function.

Manual Control

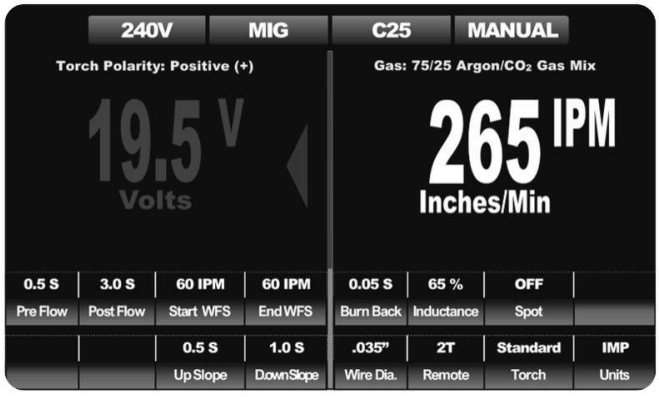

Pros:

- Allows full, unlimited range of control of all process functions.
- Offers Pro-level of control and complete customization of program settings.
- Usually provides best results for experienced, knowledgeable users.
- All functions allowed to be programmed and can be saved.

- All functions and settings can be viewed at one time.

Cons:

- Higher risk of operator induced error.
- More knowledge and skill required to operate competently.
- More extensive setup process.
- Must know proper volt/amp ratios for setup that are customary, or must be able to fine tune programming on the fly by ear/sight.

Starting-up the Welder

WHAT TO EXPECT ON START UP.

Before the first start and use of the machine, check all your connections. Make sure all fittings are tight and that your gas cylinder valve is fully open. Put on proper safety equipment (PPE) and fire resistant clothing. Make sure all accessories are uncoiled and properly connected. Inspect the accessories and ensure that they are in good working order.

⚠ WARNING



WARNING! Accidental arc flashes and burns could be possible if the foot pedal or torch switch is depressed at the time of start up. Uncoiling accessories and dismounting them from the cart is important to prevent accidental triggering, arc flashing, welder damage and possible injury.

When the welder is switched on at the rear of the unit and the start-up process begins, the welder will greet you with the start-up screen while it is booting up. All LED lights on the front panel will light up on the front to allow you to inspect their functionality. The boot-up will take up to 5 or 6 seconds as the machine re-adjusts for the voltage input and recalls the last settings used. *The boot up screen will look similar to this:*



During the boot-up process you may hear a series of slight clicks, thuds, or thumps as the machine switches relays and solenoids. This is normal. Ilt is important to note that similar thuds or clicks that are heard on start up can also be heard as the machine swaps processes or when certain functions are selected. This is normal and should not be of concern.

When fully booted up, the screen arrangement should look similar to this, depending upon the actual process and functions selected:

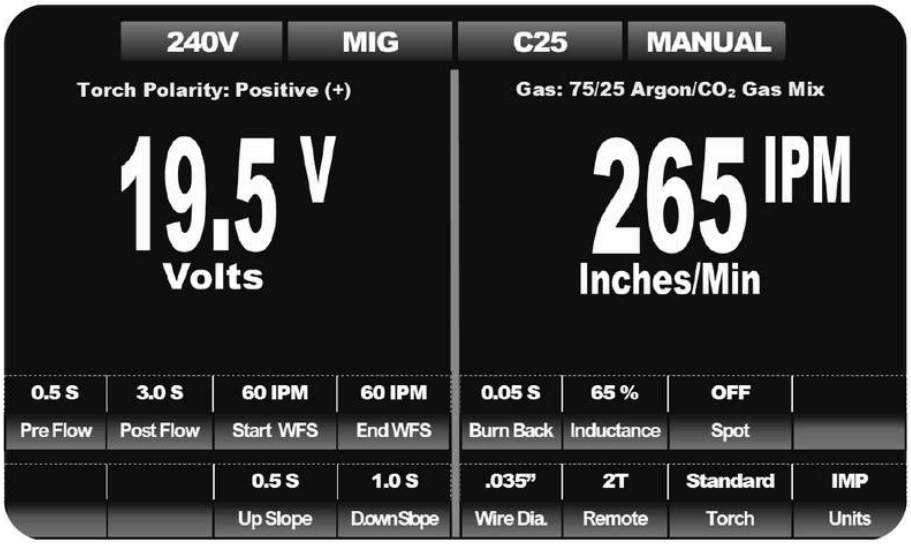

It is recommended that all functions be checked for proper operation every few months so that any malfunction can be noted and reported before it is needed. If any malfunction of the control screen or the welder is observed, contact Everlast Tech Support.

TAKE CARE OF THE LCD SCREEN.

The screen is a high resolution 5" TFT color LCD screen. It is important to take care of it. Keep the cover shut when welding or when not in use. *Additionally, cut-to-fit screen protectors can be used with the screen (and it is recommended to do so) to offer a second layer of protection and keep the screen in like new conditions. These are customer-supplied and available at local stores that sell electronic items such as computers or mobile phones.* These should be periodically removed and replaced. Lightly clean the screen only when needed with standard screen cleaning solution and lint free cloth designed for cleaning screens or lenses. Do not use harsh detergents, solvents or alcohol. The front protective cover is plastic and may get scratched if it is wiped dry. If heavy dust has accumulated, use dry compressed air to blow off the screen. Do not try to dry wipe with dirty rags, sleeves or gloves or the screen may become damaged.

Functions vs. Parameters vs. Status

This manual makes frequent use of the words “mode”, “settings” “functions”, “parameters”, “values” and “status”. In some cases it may seem that some words are interchangeable. And in a number of cases, there may be indeed some limited interchangeability in the terms since a function may also double (when turned on) as an adjustable parameter or could indicate a mode. To clear up the confusion between the terms, here is a brief explanation of Settings, Functions, Parameters, Values and Status and the general intended use of these words in this manual.

A mode can refer to the selection of a particular function, or a welding process. The welder has several different processes. Each process can also be considered a mode. For example, you may select “DC TIG Mode” to weld. But you can also select the Spool Gun mode from the torch function on the screen. The term mode is broadly used.

Settings is a broad term inclusive of both functions and parameters. When the term settings is used it is meant to refer to both generally and can also refer to status or value.

Functions are features and modes of the machine. Functions will dictate the way the welder behaves and what parameters are offered for adjustment to the user. A function can indicate a mode of operation, such as 2T torch switch operation as opposed to Foot Pedal operation. A function will typically be associated with words like On or OFF, or even indicate a gun type or mode.

A parameter is an adjustable feature of the machine. Pre-Flow, Post-Flow, Up-Slope, Down-Slope, Inductance , etc. are all examples of parameters.

A parameter is defined by its value. The value can be expressed in Seconds, Amps, Wire Feed Speed, or Percent. Values are expressed in numbers. Each parameter has a range of values.

Status indicates the *condition* of a function (On, Off, etc.). It can also indicate the static operating condition or welding mode of the welder on the status bar at the top of the menu screen.

06 Shielding Gas

Gas selection, regulator connection and gas types.

CONNECT YOUR UNIT TO SHIELDING GAS.

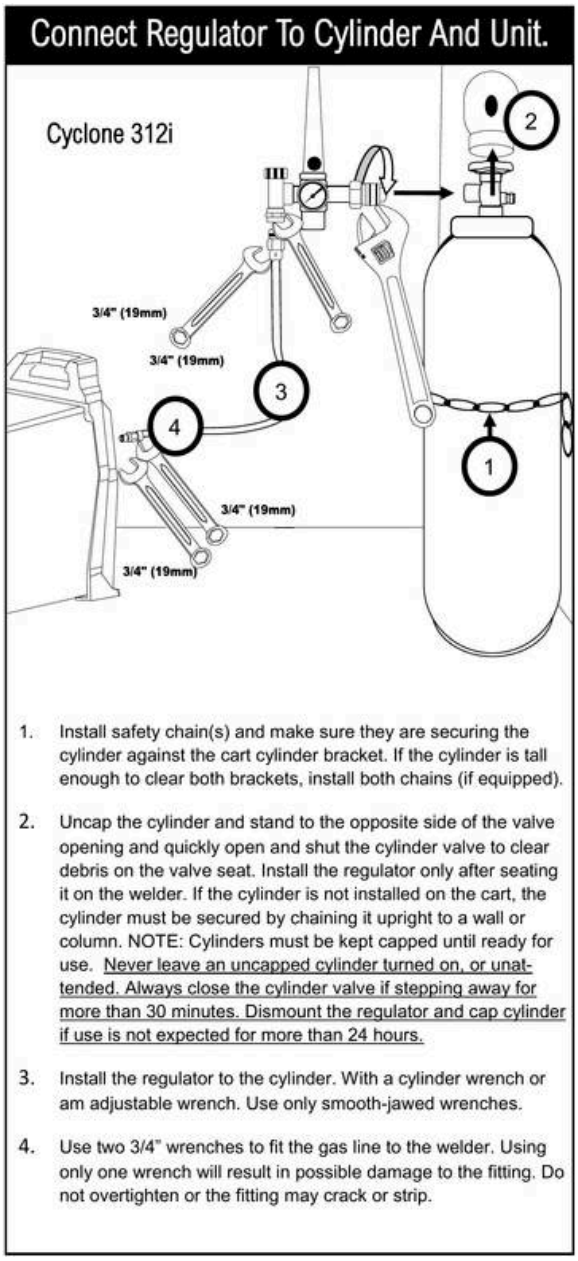

Always wear safety glasses when installing a gas cylinder to the welder. Before installing the regulator, stand to the side of the cylinder valve, out of the way of the path of gas discharge. Make sure no one is in line with the valve discharge or near the valve outlet. Then, give a quick blast of gas from the cylinder by rapidly opening and closing the valve approximately 1/2 to 3/4 turn as seamlessly as possible. This will dislodge any dirt or particles stuck in the valve or the threads. This will help reduce the chance of dirt particles getting into the solenoid valve, causing future sticking and failure issues.

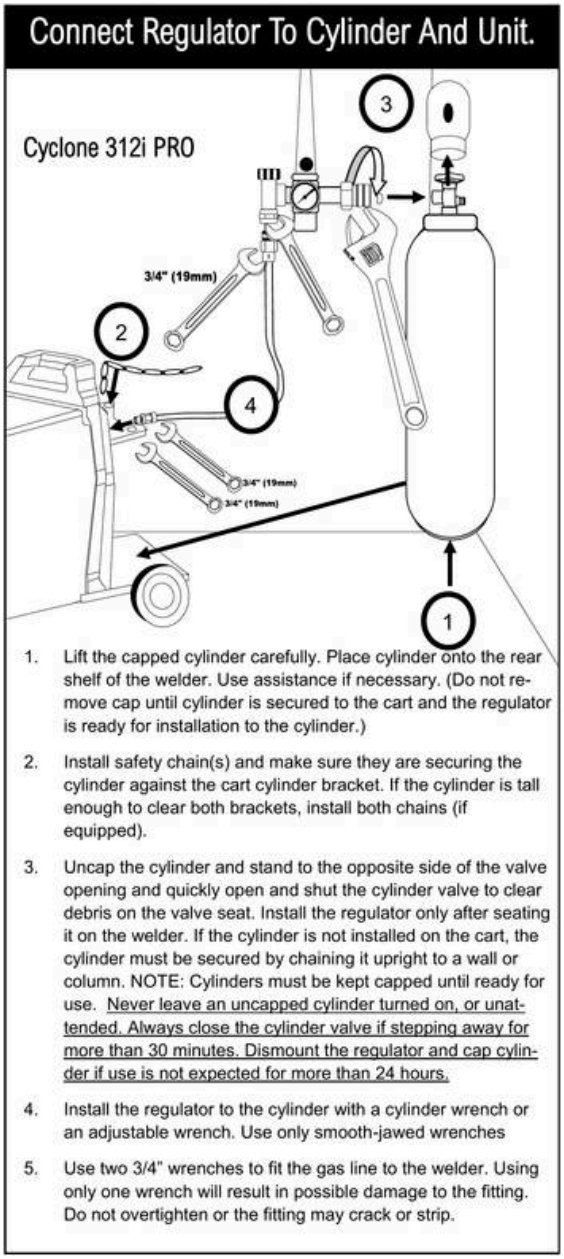

⚠ CAUTION

Do not tighten the rear unit connection without holding the female 5/8 CGA fitting located on the unit with a wrench, or damage may occur to the bezel and the fitting as the fitting may turn in the housing while the hose fitting is being turned.

This unit is equipped with one 5/8" CGA rear gas connection, for MIG shielding gas. This allows only one cylinder to be connected at the same time. This connector is clearly marked on the rear of the welder. When connecting, be sure to the right type of gas is connected.

The welder is supplied with one regulator, which means the regulator be swapped from one cylinder to the other when changing from MIG to TIG or vice versa.

NOTICE

This unit does not use the rear gas connection point for TIG. The gas regulator fitting is routed directly to the optional Gas Valve TIG torch. The gas flow is controlled directly on the torch handle. A combination of fittings (user supplied, locally sourced) may be required to connect the torch directly to the regulator. Everlast offers gas valve torches which are required for this style operation, but does not offer a complete connector package that directly hooks the gas line to the regulator.

To connect a North American Cylinders= with a CGA 580 valve to the regulator a cylinder wrench or 1 1/16″ wrench will be required. If you do not have a cylinder wrench or properly sized wrench, an similarly-sized adjustable wrench will work. However, make sure it is properly adjusted to prevent rounding of the shoulders of the fitting. Do not use pliers, or any wrench with a serrated jaw such as a pipe wrench to tighten the fitting.

Connect the regulator tubing to the regulator. The regulator tubing may have either a hose barb connection (Non-North American Markets) or a threaded connection (North American markets). If the regulator supplied has a hose barb, make sure the hose barb fitting is tight on the regulator. Tighten with a 3/4″ (19mm) wrench. If it is a threaded connection, use two 3/4″ (19mm) wrenches to hold both the regulator and the tubing connection at the same time. Hold counter pressure on the regulator connector while tightening the hose fitting to prevent damage to the regulator and to ensure maximum sealing. After connecting the tubing to the regulator, connect the other end of the tubing to the 5/8″ CGA fitting on the unit. Hold the fitting on the unit with one 3/4″ (19mm) wrench firmly while tightening the regulator hose fitting with another 3/4″(19 mm) wrench. Other markets outside of North America may feature a hose barb connection in the rear.

IMPORTANT: This is a compression fitting! Do not use thread tape or pipe sealant on any cylinder, regulator or other unit connection. The residue and debris may get into the gas solenoid and cause operational issues. It is recommended that NPT 90° elbow fittings not be used in conjunction with these fittings to reroute the angle of the connection. Use only CGA 5/8″ elbow (90°) fittings if rerouting of gas line is required.

REMEMBER: *Do not tighten the rear unit connection without holding the female fitting on the unit side with another wrench. If you fail to do so, damage is likely occur to the bezel and the female fitting as the fitting may turn in the plastic housing. Overtightening will cause the fitting to snap-off in the solenoid housing or crack down the threads.*

What Shielding Gas Should Be Used?

The Cyclone 262i is a synergic welder which incorporates on screen recommendations for the type of gas needed for each process. The MIG gas recommended may change due to the settings of the unit. This change occurs when the wire settings cross over into the spray arc range when C25 (Steel) is selected on the panel. Keep in mind this is not an absolute guide, but is based off of generally accepted industry accepted thresholds. When the gas change recommendation occurs, the main display numbers will change to yellow to reflect the process limit has been reached. *If the gas is not changed, arc performance will begin to become increasingly erratic as the spray threshold is reached or surpassed.*

The following gases should be used with this unit:

MIG

Steel:

- 75/25 Ar/CO2 (C25) for Short Circuit, Globular Transfer or Gas Shielded Flux Cored. (80/20 Ar/CO2 is permissible in lieu of 75/25.)
- 100% CO2 (C100) for Short Circuit or Gas Shielded Flux-Cored.
- 90/10 Ar/CO2 (C10) for Spray Arc. (92/8 Ar/CO2 is permissible in lieu of 90/10 if not available but will slightly affect accuracy of settings. 98/2 Ar/ O is NOT recommended.)

Stainless (Inox):

- 98/2 Ar/CO2 for Short Circuit and Spray. (Do not use 98/2 Ar/O2 or the settings will not be accurate).
- 75/25 Ar/CO2 for Gas Shielded Flux-Cored (Consult wire mfgr.)
- Tri-Part Gas Mix is permissible for only short circuit transfer. However, it is not recommend due to extreme cost.

Aluminum:

- 100% Ar (Argon) for all applications.

DC TIG (This unit does not have AC TIG used for welding Aluminum.)

Steel/Stainless (Inox):

- 100% Ar for all applications.

For short circuit MIG welding steel, C100 setting is more economical, but will produce more spatter while welding. Never use for Spray.

While “Tri-mix” (Tri-Part gas mixes with Helium) are permissible for Stainless welding with MIG, 98/2 Ar/CO is typically the most widely available and most

2 economical shielding gas for Stainless Steel MIG. Do not use pure Argon (100% Ar).

Aluminum always requires the use of pure Argon (100% Ar) shielding gas while welding in MIG mode. This is a widely available and a standard gas throughout the world. Aluminum is designed to only be welded in a spray transfer setting. Short circuit should only be used for thin, non structural applications. Regardless, only pure Argon should be used.

For TIG, only one gas is used for all metals. 100% pure Argon.

What Size Cylinder Do I Need?

Gas cylinders come in a wide ranges of sizes. Cylinders range from about 20 Cu. Ft. to over 300 Cu. Ft. capacity. For this unit, there are at least two different gas types that will be used for MIG and TIG operation. This will necessitate either exchanging each cylinder at the store when a different process is used or you will need to have at least two cylinders on hand (possibly more, depending upon the metal you are welding). The size you use will depend upon how much of each process you expect to do. Average gas consumption is around 25 to 35 CFH for MIG and 15 to 25 CFH for TIG. To figure the actual amount of solid welding time cylinder will last use this basic formula:

Cylinder Volume Size ÷ Gas Flow Rate = Hours of Approx. Operating Time.

Divide Total Operating Time again by 60% to add time for stopping to fit, cut, grind, measure and to allow for miscellaneous time not spent welding.

This should give you a rough idea how long the cylinder will last and what size you will need based off typical shop use patterns.

Gas supply companies have several confusing ways to rate their cylinder sizes. One way (the best) is to rate them by volume. Another way is by letter designation, which relates generally to a volume size (some may be slightly more or less volume than others with the same letter). Yet another way to rate them is to size them by height. The most common (nominal) cubic foot sizes (Cu. Ft.) are 20 , 40, 80, 125, 150, 200, 250, and 300/330 for most MIG and TIG gases. Assigned lettering and actual volume may vary from each supplier, so be sure to compare only volume when shopping. Larger cylinders do exist but these are not typically used in most small shops (except for CO2). Not all gas companies carry the full range of gas cylinders that are manufactured.

When considering whether to buy, rent or lease a cylinder, many chain store gas suppliers will not sell any cylinder larger than 125 Cu. Ft. and some will not sell larger than an 80 Cu. Ft. due to a case law ruling. Some independent shops will sell the larger sizes. however. Shop around and compare as prices will often vary greatly, especially when selling to new customers. *Be careful when buying larger cylinders second hand since they often are labelled with a gas company's name on the round, flat metal ring on top of the cylinder at the neck. Depending upon the gas supply company, these cylinders could be considered stolen and can be confiscated. If so, another gas company cannot legally fill them.* A blank ring on the neck or a "customer owned" embossed ring or similar marking helps to ensure that the cylinder is customer owned. Some companies will offer to "sell" you a cylinder but will have the gas company name on them. In reality, these are often considered to be the company's cylinder and what they are selling you is considered a "lifetime" lease. Be certain if you buy a cylinder that you have the paperwork stating you own it outright and you have the original records or you could be out of money. Even if you have full ownership, there are some gas companies that will not fill a cylinder if another name is on the label without proper paperwork and documentation.

07 Polarity & Connections

MIG, flux-cored, spool/push-pull gun, TIG and stick.

SELECT THE PROPER TIG POLARITY AND CONNECTIONS.

Selecting the correct polarity for DC TIG is quite simple. To TIG weld any metal capable of being welded with DC (everything except Aluminum and Magnesium), the TIG torch will always be connected to the negative (-) output terminal located on the right side of the welder. Polarity will never change as long as you are TIG welding. If you select the wrong TIG polarity (Positive +), the Tungsten will be rapidly consumed. It will ball up and draw back to the collet body after only a few seconds after the arc is struck. Of course, if the TIG torch is correctly connected, the work clamp will be connected to the positive (+) terminal located on the left side of the welder. Incorrect polarity will also cause difficult, if not impossible Lift Starts. *NOTE: The interior MIG polarity connection under the cover is irrelevant during TIG operation. It does not carry current to the TIG torch. However, the MIG torch should not be connected when using the TIG process. Also the TIG torch should be disconnected when in the MIG process.*

The TIG torch is not supplied with this welder. This unit provides basic lift start DC TIG operation. A “TIG rig” style connection is required which utilizes an optional Gas-Valve TIG torch and connectors. The unit does not support remote amp control (i.e. foot pedal). The amperage is preset on the panel. The torch remains live while connected.

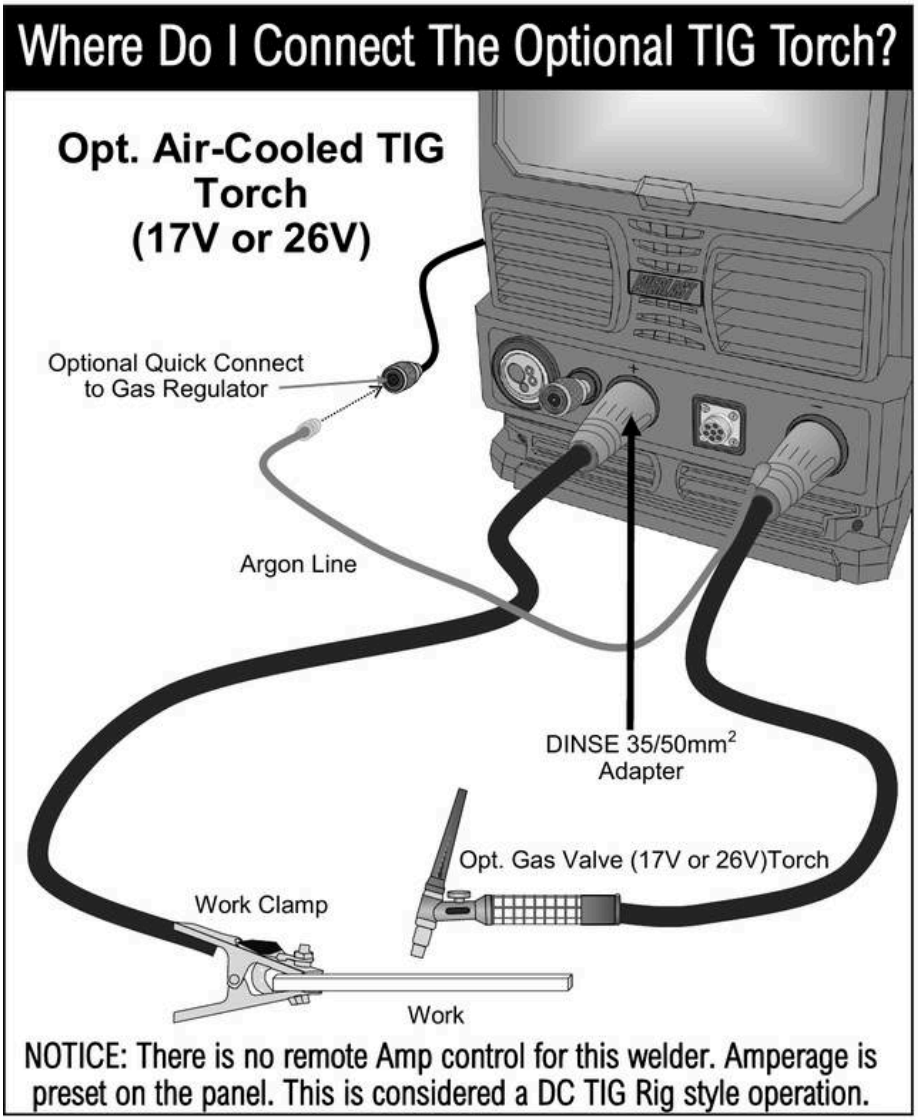

SELECT THE PROPER STICK POLARITY.

The electrode holder, or stick torch (also commonly called a “Stinger”) will almost always be connected to the left positive terminal of the machine when welding in DC Mode. The work clamp will then be connected to the negative terminal on the right side. This is known as DCEP (Direct Current, Electrode Positive) or “reverse polarity”. Although “reverse polarity” is an older term, this is still used to refer to Stick torch polarity as is DCEP. Most all welding electrodes (rods) weld primarily in DCEP. There are a few rods like E6011 which can operate well with either polarity. Even so, the preferred polarity is DCEP. Reasons for welding with DCEN are usually to provide a softer arc or to reduce burn through with aggressive rods which produce a driving, harsh arc. Switching to straight polarity (DCEN) in stick mode will not harm the welder, but it may not produce reliable or sound welds.

SELECT THE CORRECT MIG AND FLUX-CORED POLARITY.

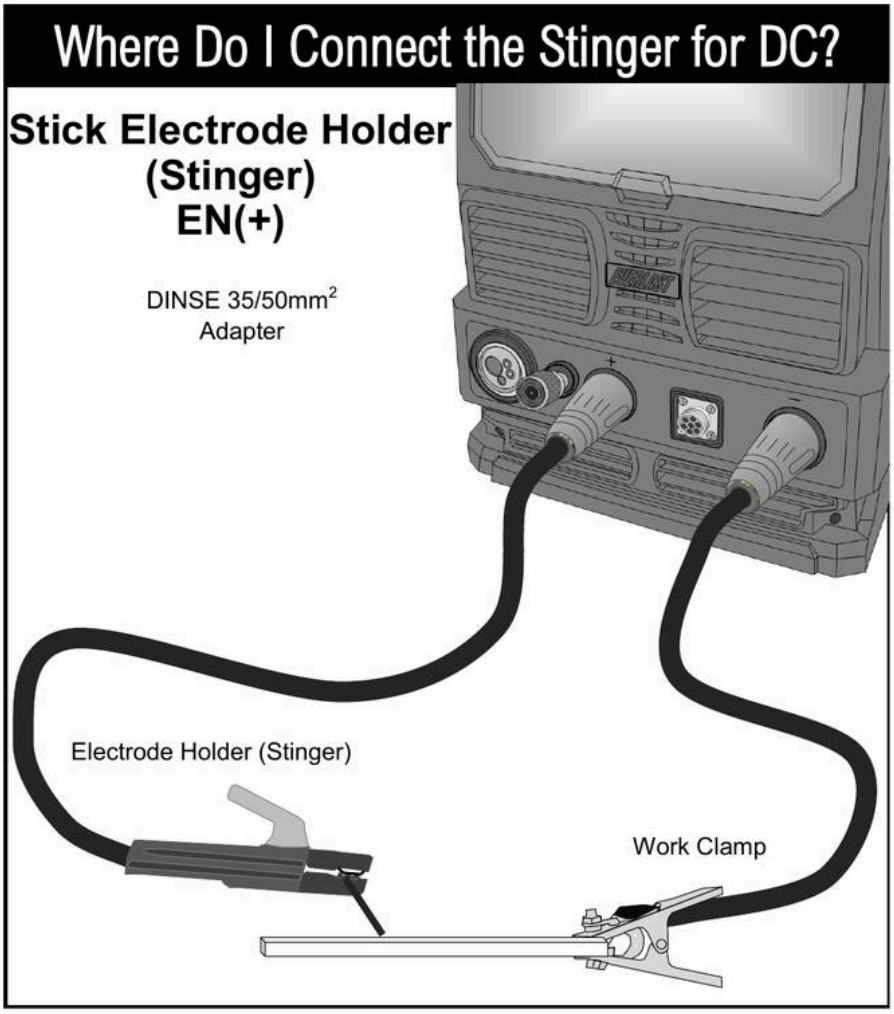

Even though similar in concept, MIG/MAG (GMAW) and Gas-less Flux-Cored (FCAW) welding require a polarity change when transitioning between the two. The unit will remind you with an on-screen prompt to change polarity when you change between the processes, but this is an often over-looked issue, even when reminded by the machine. Failure to change polarity will result in erratic operation, bird's nesting of the wire, poor fusion and excess spatter.

The Flux-Cored setting on this unit is a gasless type of flux cored wire. This setting is not meant for dual-shielded flux cored wire that uses shielding gas as another component of shielding while welding. Using dual shielded flux-cored wire will cause inaccurate output of the machine and higher voltage readings than set and typically designed to be used with the machine (at higher settings). This can lead to overheating and damage to the machine. Gasless Flux-cored wire is also a different polarity than most dual shielded flux-cored wires. Gas flow will not be controlled

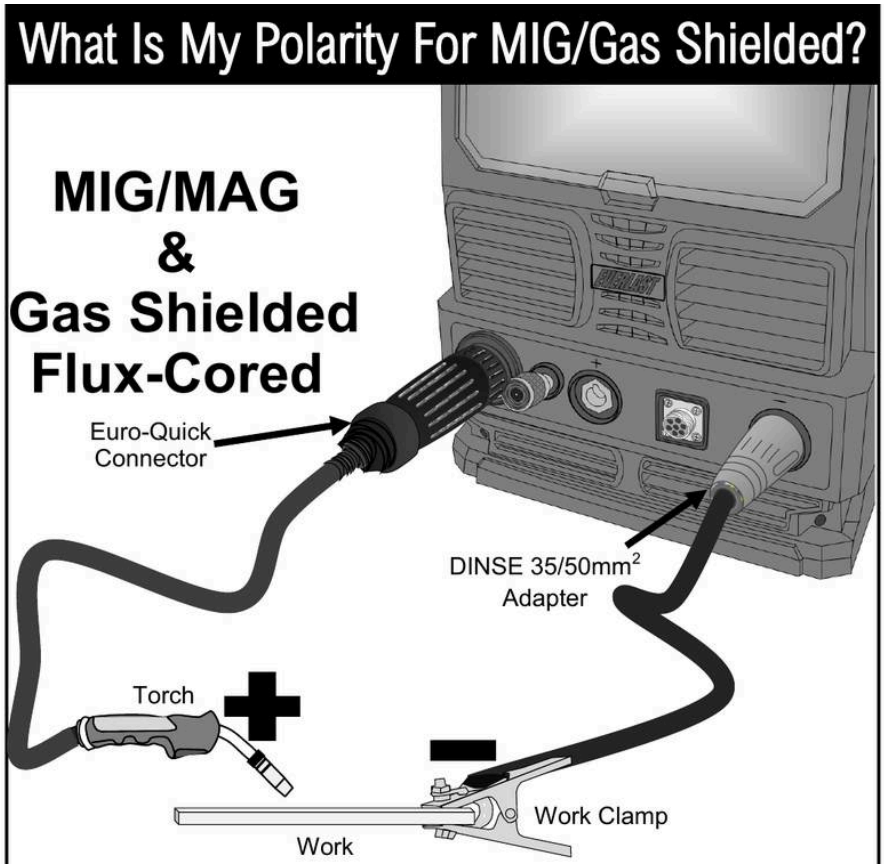

The MIG gun must also be correct in polarity for proper performance. Drop open the cover on the left side of the MIG to access the wire spool and feeder. Just above the feeder, the are two terminal lugs. The upper is Positive, and the lower is negative. If there are no positive (+) or negative (-) symbols, there may also be a label that says “Gas MIG” and “Gasless”. Regardless, the top terminal is positive and the bottom terminal is negative. For all MIG and most Gas (Dual) Shielded Flux Cored Wire, the wire feeder cable should be connected to the top, positive (+) terminal with via the provided screw. See below.

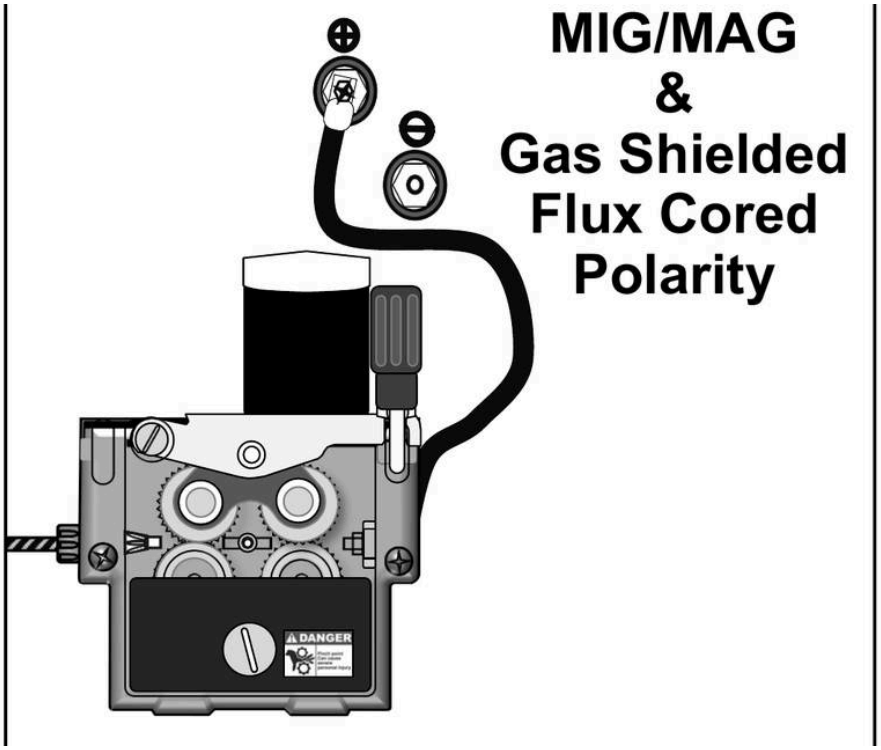

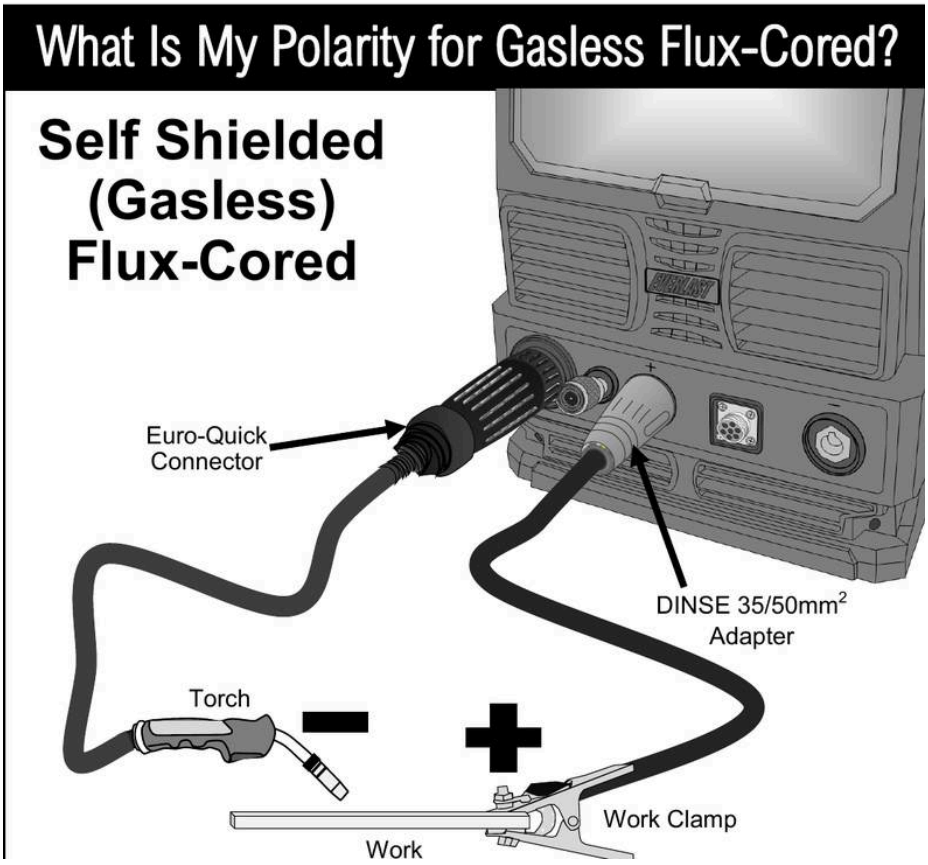

When welding most all Self-Shielded (Gasless) flux-cored wires, polarity will be negative. There are a small number of exceptions. However, if the manufacturer doesn't state the polarity, assume it is negative. Drop open the cover on the left side of the MIG to access the wire spool and feeder. Just above the feeder, the are two terminal lugs. The upper terminal is Positive polarity, and the lower terminal is Negative polarity. If there are no positive (+) or negative

(-) symbols, there will be a label that says “Gas MIG” and “Gasless” or similar terminology. Connect the wire feeder cable to the bottom terminal lug via the provided screw.

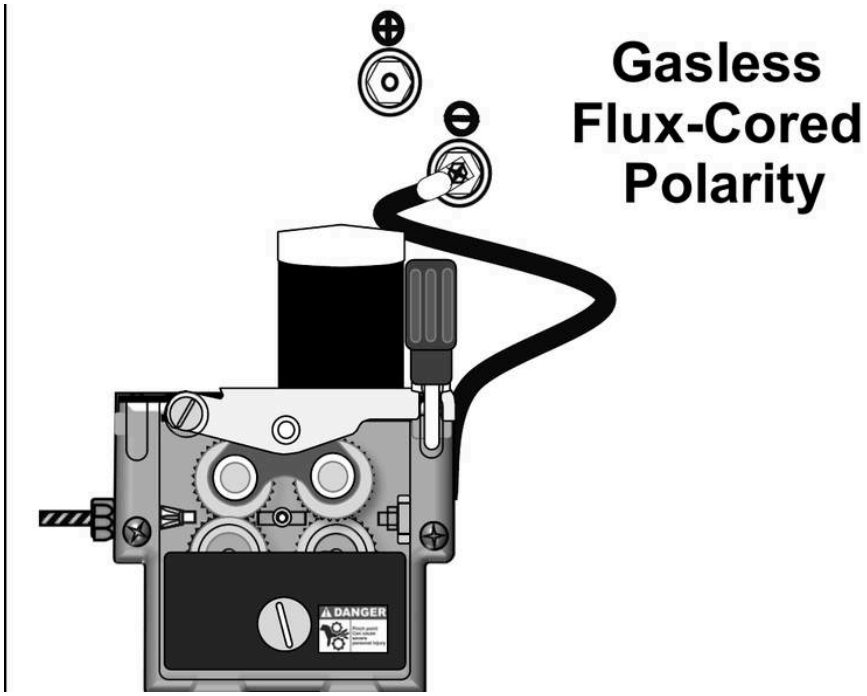

NOTICE

While the standard gun is able to weld for short periods of time with Self Shielded (Gasless) Flux Cored wire, it is not meant for full time or long term use and will overheat in heavy or long term use. For dedicated Flux-Cored use or for extended periods of use, you use a Flux-Cored gun. Flux-Cored guns are available from after-market sources. Everlast does not provide Flux-Cored guns as optional equipment.

INSTALL THE OPTIONAL SPOOL AND PUSH-PULL GUN.

Although this welder can be used with U-groove drive rolls and a polymer PTFE liner installed in the standard 10 ft (3m) gun for welding aluminum and achieve excellent results, this unit can also be used with both a spool gun and a push-pull gun for softer alloyed aluminum wires and longer distance aluminum welding requirements.

For spool-gun applications, the optional DSP 360 gun is recommended for this unit. Spool guns are typically for lighter work or for occasional MIG welding of aluminum. It is not the most economical way to weld aluminum. Using the standard gun, PTFE (aluminum) liner and U Groove drive rolls, or the Push Pull gun are much more economical to use, reducing price-per-pound cost by as much 2/3 or more.

The Everlast MPG300A Push-Pull gun recommended for this unit is the “snake-head” type which is an “inline” gun style. Although slightly heavier than a conventional MIG gun, this gun looks and feels more like conventional type MIG gun. The “Pistol Grip” Style SGP 360 Push-Pull can also be used for those that prefer the weight and balance of this Heavy Dut Design.

Both spool and push pull units feature “on-the-gun” control of the Amps/ WFS. At purchase, be sure to specify that you need this newer style of control for the units. Do not attempt to adapt other brands or types of spool guns or push pull guns to the welder or the welder circuit may become damaged. There may also be problems for calibration. Use with other brand guns not approved by Everlast will void the warranty. If a “will fit” brand is being considered, call Everlast for evaluation and approval. Do not rely upon claims of other companies assuring compatibility.

Make sure to use electrode positive polarity for the spool and push-pull guns, which is the same for standard MIG welding for typical solid wire welding with a spool gun. *It is possible that some specialty wires may vary from these recommendations. Always consider the wire manufacturer's recommendations as the final authority on polarity. Most gasless flux - cored wires are electrode negative polarity. Use with flux-cored wire is not recommended because there is no shielding gas to assist in cooling the gun, and the gun nozzle may become plugged or damaged due to the excessive amounts of spatter produced in gasless flux-cored welding.*

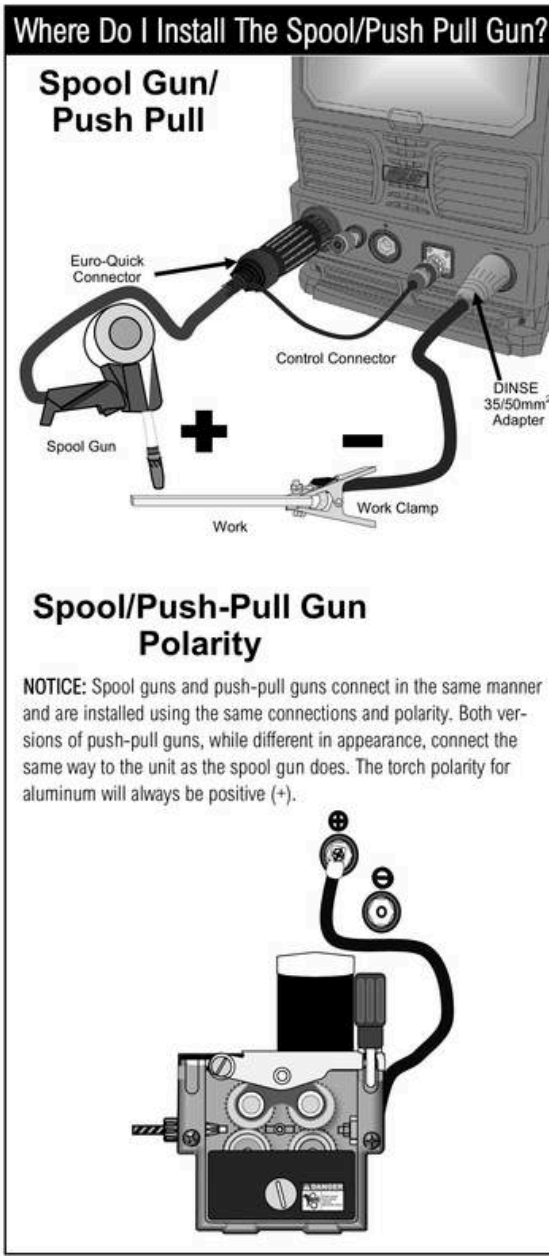

08 MIG Gun, Liner, Drive Rolls & Wire

Installation and assembly.

How Do I Disassemble the MIG Gun?

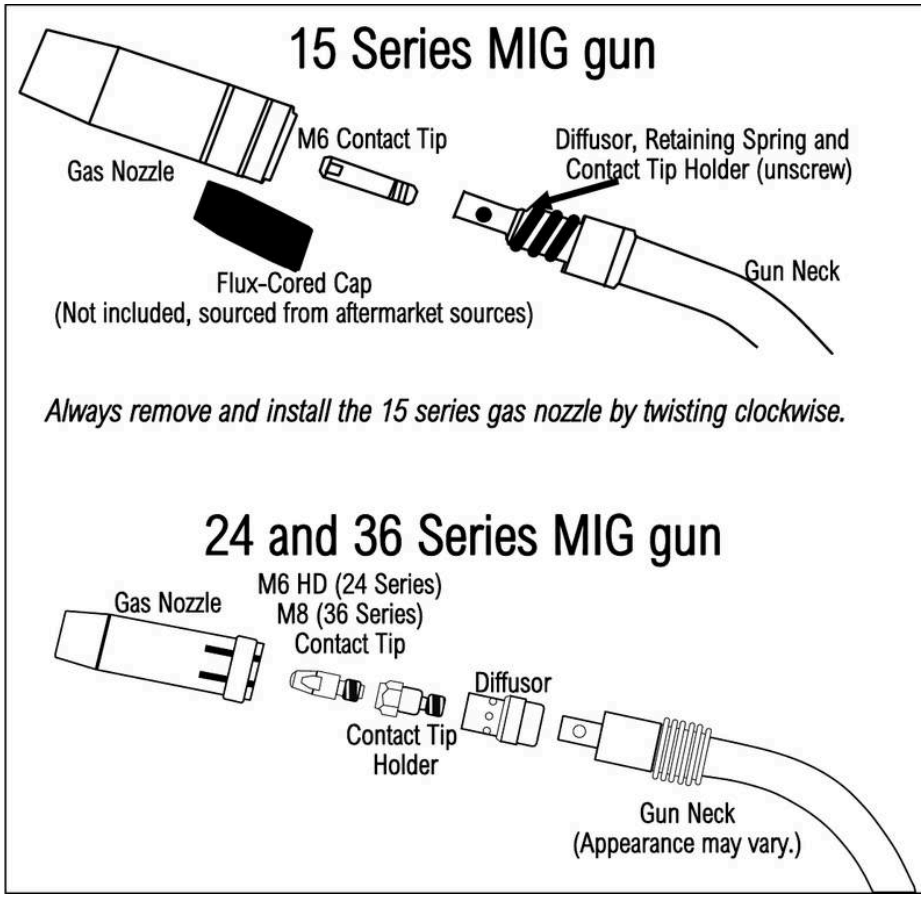

USE THE CORRECT GUN AND LINER.

This unit is delivered with a 36 series gun which is rated for the maximum output of this welder. It is designed for use with Axial Spray operation with wires .045″ and greater in diameter. This gun may be too big or bulky for more delicate operation and is not designed for short circuit operation. The supplied yellow liner may also be too big as it is designed for .045/.047″ and .062″ steel wires. The liners are color coded and are designed to operate best with the correct sized wires. Blue liners are for .023″ (.025″/ .6mm) to .035″ (.9mm) diameter wire. Red Liners are for .040″ (1.0mm) to .045″ (3/64/.047″/1.2 mm) diameter wire. This color coding system also applies to the polymer PTFE liners as well. If short circuit welding below 250A is expected, purchase a 24 series gun. If light duty short circuit is used, and maximum flexibility is needed, the 15 series gun can be purchased. These guns are to be purchased in addition to the supplied 36 and are not exchangeable after the sale. These are optional optional purchases you may make in addition to the standard gun at the time of or after the sale. You may also need to purchase the correct liner as well. The 36 is delivered with a yellow liner, the 24 with a red liner and the 15 with a blue liner installed. The liners, including the PTFE liners for aluminum, are interchangeable with these guns.

CHECK AND CHANGE YOUR DRIVE ROLL.

The unit comes with a pair of .035″ and .045″ drive rolls installed. Remember, if you change wire size or type, you will need to either flip both of the lower drive rolls over for the opposing size or completely change both of the drive

rolls out with the ones of correct size and type found in the consumable bag. When not in use, keep these “spares” put up where moisture and dust cannot get to them. They will rust if not stored properly.

The top drive rolls are actually idler rolls used to hold tension and keep the wire in the groove. These should not ever be removed or changed unless damaged. Only the bottom drive rolls needs to be changed for proper sizing. Each of the bottom drive rolls have two small grooves that are sized for .035″ (.9mm) and .045″ (1.2 mm) solid wire. NOTICE: .045″ is nominally the same wire as .047″ and 3/64″ sizes. The small discrepancy (.002″) in wire size will not matter. Additional sizes and types of drive rolls are available as options. The standard installed drive roll is meant to feed hard (solid) steel wire. The groove on this drive roll has a “V” shape designed for the solid wire. A Flux-Cored drive roll has a serrated edge to the groove, which grips the softer, cored wire. Viewing a flux-core drive roll from the top, you will see a “zipper” like pattern. This should never be used to feed hard steel, stainless or aluminum wire. This will result in damage to the wire, metal flaking and possible plugging of the MIG gun liner. To determine the exact size of wire and type you have, look at the side of the drive roll. The size of the drive roll groove is stamped on the side of the drive roll closest to the corresponding groove. The type of the drive roll will also be stamped with a V if it is for solid (hard) wire. If it is stamped with an “U”, this is a special drive roll for feeding aluminum wire. Aluminum wire is best fed with the push pull gun or the standard gun with a PTFE liner and U groove drive rolls..

The drive rolls are held in place by a screw. Use a flat head screw driver to gently remove the screws to expose and change the drive roll. The drive rolls are mounted on a bushing. To prevent the bushing from being removed along with the drive roll, use the index finger of one of your hands to hold the bushing while the other hand removes the drive roll. When removing make sure that the square locating key is not dismounted. If the key falls out of the keyway, replace it before replacing the drive roll. When the drive roll is reinstalled, just lightly snug the screws with the screw driver. Do not over tighten.

Drive Roll Size and Location Info

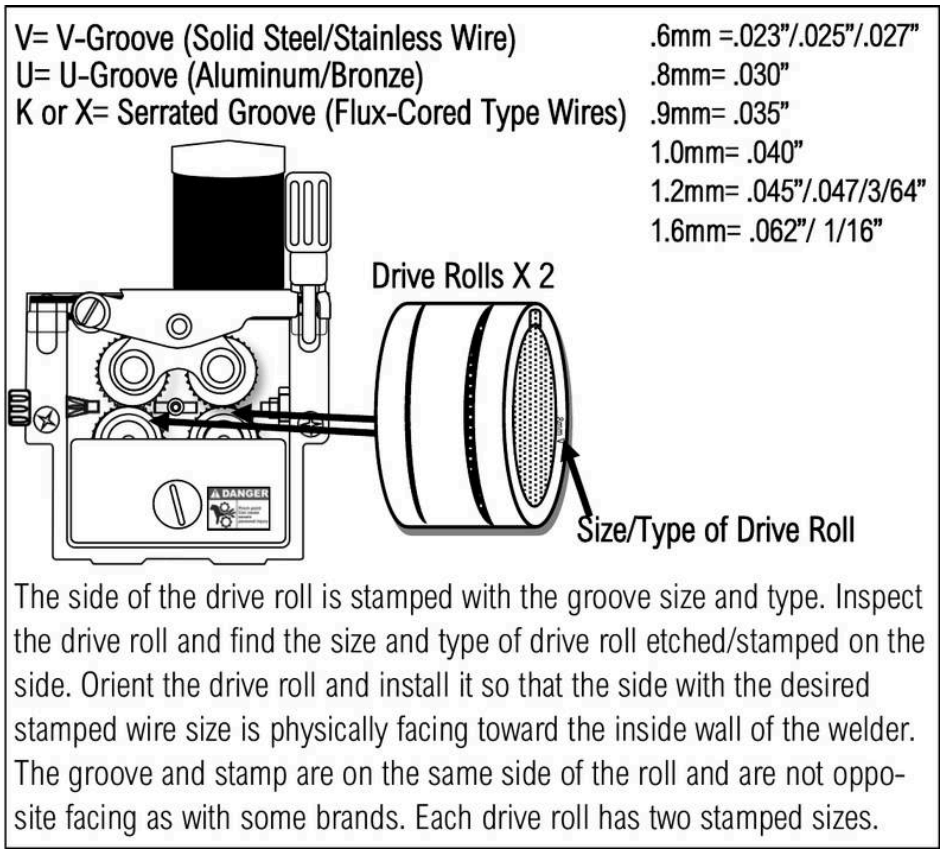

INSTALLING THE MIG WIRE SPOOL

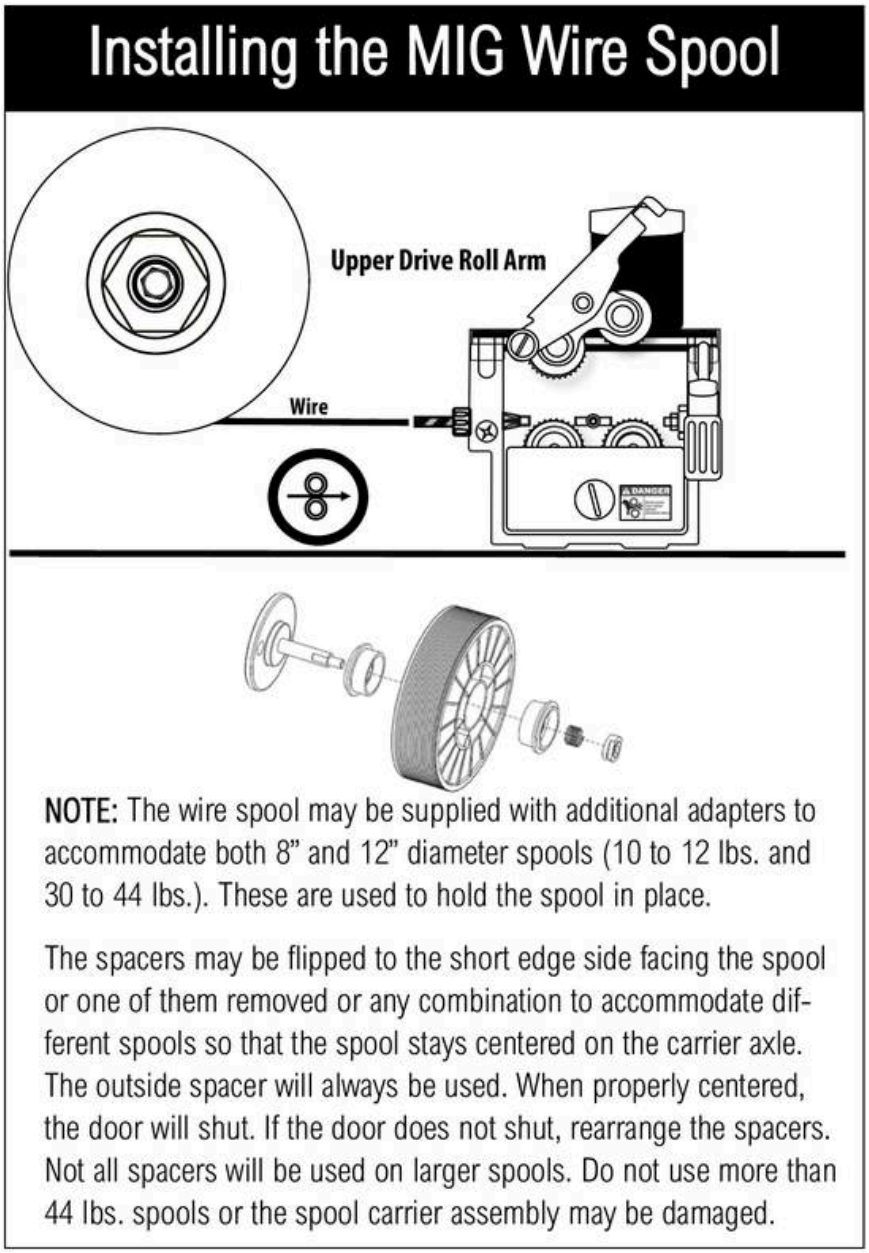

Install the wire spool as shown above. Once the wire spool has been installed, flip the tensioner lever down and raise the top drive roll to the upper position. Gently guide the wire from the spool over through the wire feeder and into the front section of the gun at least 6 inches. Make sure the wire lays neatly in the groove. Hold it with your finger if necessary as you lower the top drive roll down and raise the tensioning lever with your other hand. When complete the wire should look like the illustration on the previous page. *Hint: The wire on the spool is usually bent and threaded through a small hole in the side of the spool to lock it in place and prevent de-spooling of the wire. Keep one hand on the wire spool to prevent despoiling and cut the wire loose with a pair of wire cutters. Trim the wire to make sure the end of the wire is straight and able to be threaded through the wire feeder mechanism and gun.* After the tensioner is raised back to the vertical position, confirm the wire is still in the groove and is not riding up on the shoulders of the drive roll.

Next, turn the welder on and set to a desired MIG or Flux-Cored mode.

NOTE: This unit is equipped with the 36 Series MIG Gun. However it can also be used with the 24 series MIG gun or 15 series MIG gun (optional purchase. If using the 15 series gun, remove the gas nozzle by twisting it *clockwise* and pull. Never turn the nozzle counter clockwise! Unscrew the contact tip as shown in the illustration "How Do I Disassemble the MIG Gun?." All guns are illustrated. Hold the gun cable and gun straight as possible. Press and hold the wire jog button. The wire should slowly begin feed through the gun cable and on through to the gun tip. As the wire exits the gun, allow 3 to 4 extra inches of wire to be fed out past the diffusor. Release the wire jog button. Re-install the contact tip over the wire and screw it in clockwise until it is tight, but not to the point of stripping. Install the gas nozzle.

When using the 36 or 24 series gun, make sure that the ceramic diffusor is carefully handled. Tipping the gun with the contact tip holder removed so the gun points down may cause the diffusor to drop out and break on the floor. To change the tip, hold the gun so the contact tip faces up. *Ordinarily, the diffusor has a long life and is durable. But dropping the gun while hot or while the gun is nozzle is removed, may cause the diffusor to crack or shatter.* The diffusor design provides superior gas coverage over the weld and allows a cleaner weld to be produced, and will last a long time if these precautions are observed. (A minor chip will not require a new diffusor unless the diffusor is cracked.)

TRIM THE WIRE AFTER INSTALLATION.

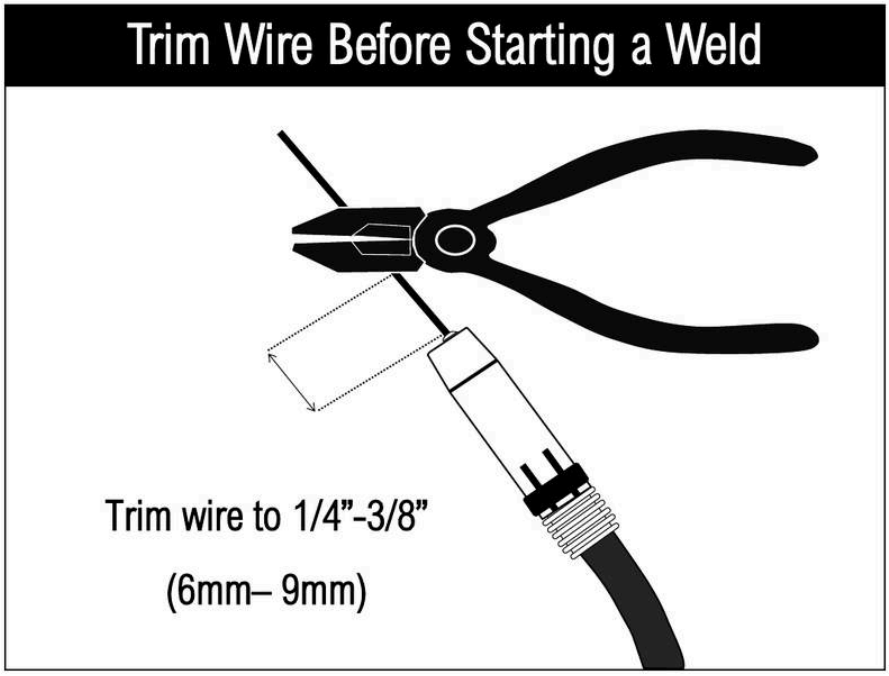

Trim the wire sticking out of the nozzle to 1/4" to 3/8" (6mm to 9mm) in length with wire cutters. See the illustration above. The gun is now ready for welding . *Hint: Always make sure that you re-trim the wire before beginning a new weld if the wire is not already trimmed to this length. This will help to improve restarts.*

PROPERLY TENSION THE WIRE FEEDER.

To feed properly, the wire needs to be tensioned before you begin welding. The tensioning lever has numbers on the dial. To increase tension, rotate the tension lever clock-wise. Different types of wires require different tensions. There is no exact tension that works for all wire types. However, for steel wire, you will generally tension to at least 3 to 3.5 on the dial. For flux-cored wire, use 2 to 3. For Aluminum use 2 to 2.5. Wire diameter also plays a small part in the amount of required tension that is needed. Regardless of the wire type or wire diameter, follow the process

below and refer to the following illustration. Turn the unit on and use the wire jog to feed the wire until the wire extends approximately 1" beyond the gas nozzle.

- Find a small block of wood, such as a two by four, and secure it to the welding table or other solid object. Do not perform this on metal or arcing may occur!
- Hold the gun approximately 2 inches off the wood. Aim the gun at the block of wood so that the nozzle is at a 30 degree angle.
- Pull the trigger and allow the wire to contact the block.
- Increase wire tension so that the wire contacts the block of wood and is forced to curl up. Continue holding the trigger so that two or three full spirals are made.
- If the wire stops, or stutters during this process, let go of the trigger immediately and increase tension.
- Adjust the wire until the stuttering or jerking disappears.
- Do not over-tighten the tensioner or use more tension than necessary. When the wire begins to curl without any stoppage, the tension is enough.

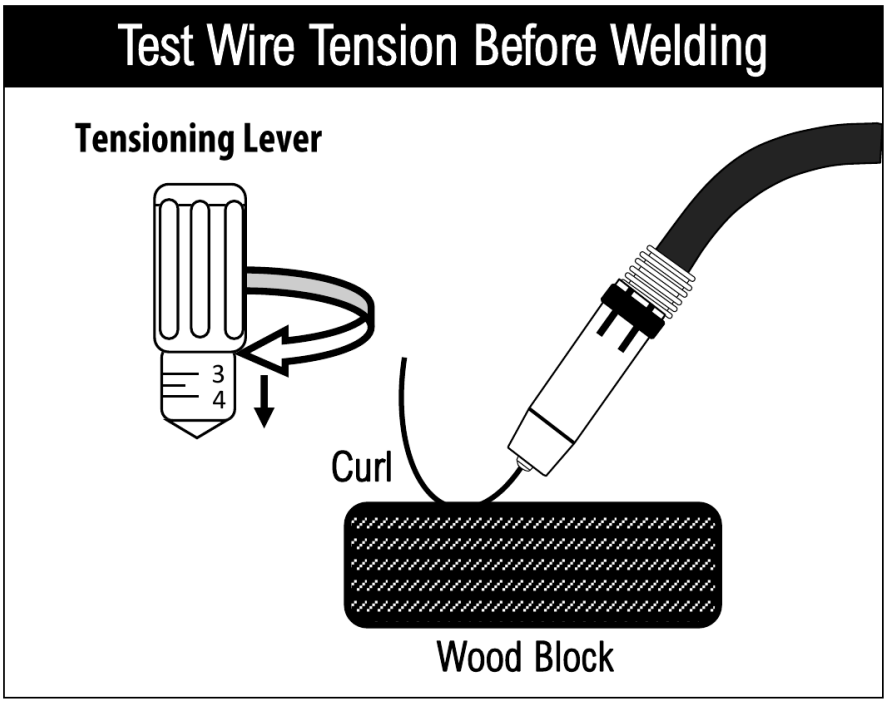

SELECTING A PROPER MIG WIRE SIZE AND TYPE.

As previously covered, this unit has been equipped with a 4 roll MIG wire feeder. While the welder's programming and design offers more than these two sizes and metals, this unit has shipped with a V groove drive roll that accommodates the two most common sizes of solid steel wires for this class of welder: .035 and .045" (.9mm and 1.2mm). Smaller or larger drive rolls can be purchased as optional items.

To cover the entire range of wire sizes and metal types that the unit supports, the purchase of additional drive rolls, guns and or gun liners will be required. This unit provides a wide range of voltage and wire feed speed. That does not necessarily mean that the smallest wire can be forced to weld the thickest materials or that the largest gun and wire supplied is best for welding the thinnest metals with the thinnest wires. The following general recommendations are intended to help guide the user through the thought process of wire type and size selection. However, user knowledge and skill will ultimately determine what wire size choice is best to use and the appropriate settings to use.

For Steel/Stainless Wire (V-groove):

.045″ (1.2mm) is the largest wire size recommended for this machine and is the largest size for steel allowed. This is because the maximum wire speed of this unit will not support the amperage output of the machine with larger wires. Keep in mind that .023-.025″ (.6mm) wire is used for lighter gauge material but only offers about a 7 Amp advantage on the low end of settings over .030″. It will also reach a useful service limit of about 90A. Feeding and results will become erratic at higher settings. .030″ wire can service up to about 150A in short circuit transfer before it begins to enter globular transfer range. .035″ reaches spray transfer around 200A.

Even though .023″ Stainless wire is supported, it may not be available in all markets and will experience feeding difficulty in the standard gun. In this case the spool gun is the best option. Also even with .030″ stainless wire there may also some difficulty feeding wire with longer guns.

For Aluminum Wire (U-groove drive roll required with polymer liner installed or use spool/push pull gun):

Even though smaller drive rolls exist, to achieve best results, .035″ wire should be the smallest wire used with this unit (not to be used with 4043 due to the softness of the wire) in the main gun, although the wire speed will be nearly maxed out for most applications. .035″ aluminum wire also provides a very narrow range of welding of 1/8″ to 3/16″.

For best results, .040″ or .045″ is recommended is used since it can weld a broader range of material from 1/8 to 1/4″ and can also be used with the softer 4043 wire. The optional spool and push pull guns are also equipped with either a .040″ (1.0) or .045″/.047″/3/64″ drive rolls, but smaller sized drive rolls are available as an option. MIG welding aluminum is not a precise and controllable process like TIG and is typically recommended for use on 1/8″ materials and thicker, though some success can be achieved in skilled hands down to 14 gauge with .030″ wires used in a spool gun. Wires .035″ and thinner will not feed well in the standard gun, even with the proper liner and drive rolls.

For Self-Shielded and Gas Shielded Flux-Cored Wire (Zippered, or serrated drive roll):

This unit supports both self-shielded and gas shielded (dual-shielded) flux cored operation In general, Flux-cored wires smaller than .035″ flux cored wire should not be used, even if programming allows. (Some versions may allow settings with flux-cored wire sizes that are not practical). Flux-Cored wire in general is a heavier penetrating wire and is not meant for lighter gauge work. Typically Flux-Cored wire is used on 14 gauge and heavier materials. Since the nature of Flux-Cored wire carries less amperage per inch of wire delivered to the weld puddle, a larger wire may be used to deliver lower amperage at higher wire speeds However, even though available, smaller flux cored wires than recommended above suffer from weakness and the column strength of the wire is low and cannot feed longer distances. Pay attention to the size limits designated on-screen in the welder programming.

NOTICE

Although the maximum selectable size offered in the welder's programming for solid steel wires is .045″ (1.2mm, .047″ and 3/64″ wires are viewed to be the same size .045″ on this machine) for the US and North American market, it is recommended to use .045″ (1.2 mm) as the maximum wire size for this unit for use solid steel wires. This is because .045″ (1.2mm) is the largest steel size commonly available for up to 275A welding range. Although technically available in North America, .040″ (1.0mm) wire is more common in other regions of the world. For Aluminum, .040″ is often recommended for North American Auto-Body applications.

GUN AND LINER SELECTION.

This welder uses a common Euro Style Connection for the MIG gun. This allows any Everlast gun or any after market gun with the same connection to be connected to this unit. To match the 275A maximum output of this welder at the 60% duty cycle specified, this unit is equipped with a 36 series MIG gun. This gun is a larger gun suitable for conventional MIG welding up to 320A. This MIG gun is a large-sized gun suitable for industrial and commercial fabrication and maintenance. However, if lighter work is required, such as welding body panels, the

smaller 24 series MIG gun is recommended as an optional purchase. It is smaller and is a good choice for welding up to 240A for extended periods of time and up to 250A for brief periods of time.

Because of the range of output of this welder, no single gun is ideal for every situation. Additionally each gun can be equipped with different sized liners to match the wire size used. The liners, both steel liners and polymer liners for aluminum, are color coded for wire diameter sizes.

NOTICE

NOTICE: Push-Pull Guns typically use special graphene type black/gray graphene liners are sized for .045" and larger for Aluminum use. Also, even though the stock liner of the 36 can support up to .062", the maximum size of wire that should be used with this unit is .045".

The wire sizes and liner color codes are as follows: *Blue Liner: .023"-.035" (.6-.9mm) Red Liner: .040"-.045/ .047/ 3/64" (1.0-1.2mm) Yellow Liner: .045"-.062"/ 1/16" (1.2mm– 1.6mm)*

NOTICE

.062"/1/16"/1.6mm wire is not supported on this unit in the programming/calibration and should never be used with any wire or metal type. This prevents overamping of the unit due to excessive wire speed which creates Amperage output that can significantly exceed the rating of the machine. Although a liner may fit multiple sizes, for best operation, use the smallest liner available for the wire size being use.

It is also important to check and change the contact tips as well to match the wire diameter. In the case of Aluminum, order one size larger regular tips, or order special Aluminum tips that are slightly oversized. These tips will use the standard size, but typically are followed by an "A" to designate these are designed for use with Aluminum.

INSTALLING / REPLACING THE MIG LINER.

The liner of the gun is critical to proper wire feeding and welding performance. A liner is responsible for securely carrying the wire into the gun head from the machine connection. An undersized liner may be difficult to load or feed without bird nesting in the cabinet. An over sized liner will cause spatter and irregular behavior. While burn-back control can eliminate some of this excess wire , the best solution is to use the correct sized liner for the wire.

A steel liner should only be used with steel or stainless wire. If steel wire is used with a polymer liner, the liner will wear extremely fast. A polymer PTFE type liner or graphene type liner (or other similar smooth plastic type liner) should be used with Aluminum or soft natured wires. Liners designed for Steel use and Aluminum use look different but install the same way. Each must be cut to fit because they are always slightly longer than needed. This is done to custom fit liners in guns that may have stretched from use over time.

Liners do wear and are sometimes kinked from rolling or wrapping the gun cable too tight during storage or bending the gun in too tight of a radius at the base of the handle. More commonly, it can be caused running over or stepping on the gun cable. This will necessitate liner replacement. Also with an oversized liner, the wire may appear to jump or feed out extra wire after wire feeding is terminated. It can even cause bird nesting in the liner, making wire removal almost impossible. In this case, the liner will almost always need to be replaced due to the damage it causes as the wire is removed.

If a liner needs to be removed and it is difficult to remove this is almost always an indication of a damaged liner. Sometimes a damaged liner may also cause damage to the gun head or outer conduit when it is removed. If so, the whole gun may need to be replaced if the damage is severe enough. Usually this is not the case and a worn liner or a damaged liner can be replaced fairly quickly.

A damaged liner should be checked and replaced as soon as any damage is suspected.

A steel liner is a tightly coiled hardened wire similar to a lawn mower or automobile choke cable. The bottom half of the liner will be plasticized and color coded. The top part of the liner will typically be bare steel. The bottom of the liner will have a brass flange crimped to the liner.

The Aluminum liner will be smooth and will be composed of three pieces, the liner tube, brass collet and o-ring.

Both liners are installed from the rear of the gun and not from the top of the gun. See the information below.

IMPORTANT! Read these instructions carefully before attempting to remove the old liner or before trimming the new one. It is better to have to retrim a new liner than to cut too much off.

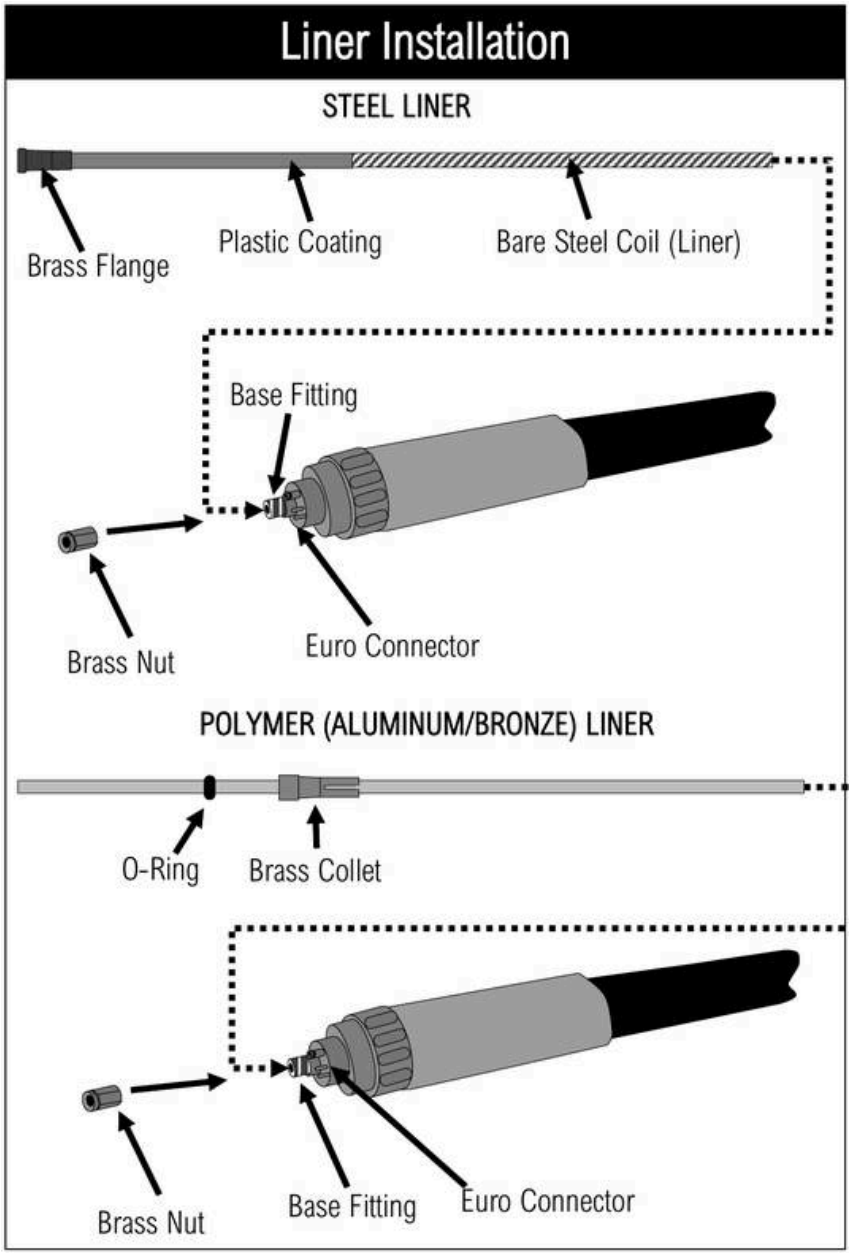

Steel Liner Removal and Installation.

1. Remove the brass nut from the base fitting on Euro Connector. Hold the base fitting while using a wrench to do this. Do not allow the base fitting to unscrew. If the fitting unscrews, it must be reinstalled before proceeding.
2. Grab the brass flange of the liner that was originally held in place by the brass nut. Pull on the flange to remove the old liner completely. Once removed, set aside. (If the liner is stuck, carefully work it back and forth, and twist

slightly to remove. The liner can break or stretch if the liner is badly damaged inside the outer cable conduit.

3. Make sure the gun and gun cable is held straight. Install the new liner as far as it will go. (Do not cut the liner yet.) Make sure the liner is inserted into the base of contact tip holder. Typically the liner will be visible with the contact tip holder installed. If the liner is not visible, remove the contact tip hold to check for visibility (some guns the contact tip hold is part of the gun neck and cannot be removed). If the liner is still not visible and/or does not appear to be inserted into the end of the contact tip holder manipulate the liner gently until it is visible and in position to mate with the contact tip holder once it is reinserted. It may be necessary to move the gun handle around gently until the liner slides home.
4. With the liner inserted fully home, measure and record the distance from the top of the threaded base fitting to the flange (measure to the base fitting side of the flange). This is the amount that will need to be cut off. Double check that the liner is still seating and that the gun is held perfectly straight. IMPORTANT: Do not cut the liner on the flange side. This is only for measuring the amount needing to be cut off the other end (Gun side of the liner).
5. Remove the new liner.
6. From the gun end of the liner (the end that contacts the contact tip), measure and mark the length to be removed. Mark it with a metal marking pen or small file. Carefully cut the steel liner to length with pair of lineman's pliers or a similar sharp cutting tool. Make a clean flat cut. A small cut off wheel may also be used if a suitable cutter cannot be found. Carefully dress the end of the liner and chamber end with a small file removing any burrs. Do not use dull cutters or the liner may collapse.
7. Reinsert the new liner and test fit. The brass flange should fit flush against the base fitting and it should fit fully home in the contact tip.
8. Reinstall the brass nut to hold the liner in place.
9. Reassemble the gun if it has not already been reassembled.

Polymer/PTFE (For Aluminum and Bronze) Liner Removal and Installation.

1. Remove the brass nut from the base fitting on Euro Connector. Hold the base fitting while using a wrench to do this. Do not allow the base fitting to unscrew. If the fitting unscrews, it must be reinstalled before proceeding.
2. Grab the brass flange of the liner that was originally held in place by the brass nut. Pull on the flange to remove the old liner completely.

Once removed, set aside. (If the liner is stuck, carefully work it back and forth, and twist slightly to remove. The liner can break or stretch if the liner is badly damaged inside the outer cable conduit.

3. Make sure the gun and gun cable is held straight. Install the new liner as far as it will go. (Do not cut the liner yet.) Make sure the liner is inserted into the base of contact tip holder. Typically the liner will be visible with the contact tip holder installed. If the liner is not visible, remove the contact tip hold to check for visibility (some guns the contact tip hold is part of the gun neck and cannot be removed). If the liner is still not visible and/or does not appear to be inserted into the end of the contact tip holder manipulate the liner gently until it is visible and in position to mate with the contact tip holder once it is reinserted. It may be necessary to move the gun handle around gently until the liner slides home.
4. Once the liner is fully inserted, install the collet over the liner and slide the collet down the liner until it is fully seated into the base fitting. (Depending upon the manufacturer, the collet may be more like a ferrule)
5. Slide the O-ring down until it contacts the collet.
6. Slide the brass retaining nut down over the liner and screw the nut down until the collet slightly compresses the liner and holds it in place.
7. Trim excess liner flush with the end of the brass nut.

09 Tungsten Selection & Grinding

Tungsten types and preparation.

SELECT THE PROPER TUNGSTEN TYPE FOR TIG.

What Type of Tungsten Do I Use?

Generally, for all types of welding 2% Lanthanated, should be used and will perform best under most conditions in your Everlast welder. There are many modern “mixes” and treatments to Tungsten that are available. Many use a primary base of Lanthanated Tungsten regardless. The claimed benefits of the newest, latest entries to the Tungsten market are seldom substantiated or tested. 2% (Blue Tip) Lanthanated Tungsten has survived as the best in scientific testing, and receives excellent results from Everlast affiliated testing and real world use. However, sometimes 2% Lanthanated may not always be available and the benefits and draw backs of each are discussed below.

For TIG welding consider the following types.

- Lanthanated 2% (blue band). Overall this is one of the best choices for TIG welding. It has great arc starting characteristics, with excellent point holding capability. Usually easily available locally.
- Ceriated 2% (gray band or orange band, depending upon brand and country of origin). This is a good choice for welding with this unit. However, it doesn’t hold up as well and starts to erode faster than Lanthanated at higher amperages. Arc start quality is excellent.
- Lanthanated 1.5% (gold band). Holds up nearly as well as Lanthanated 2% and can be used with this unit. In some tests it has rivaled the performance of Lanthanated 2%.
- Tri-Mix/Rare Earth (purple, turquois or other color band). While still relatively new, it is being marketed as a replacement for Thoriated 2%. Overall, it does perform fairly well and even excels in many circumstances. But some problems have been seen with quality control and inconsistency in performance. The primary metal oxide used is lanthanum 1.5%. Usually it also includes a small percent of Zirconium and Cerium to complete the mix. Some use Yttrium. But the balance of the components in the blend are usually stated to be around .06 to .08%, but can be allowed to vary up or down from .04% to .9%, making the blend prone to inconsistency in quality control.
- Thoriated 2% (red band) Still considered a good choice for DC TIG use. But, it has been banned in many markets outside the US due to a small radiation risk posed as an alpha emitter.

Do not use the following types of Tungsten.

- Pure Tungsten (dark green band). This will create arc instability. The tungsten will not stand up well to the more intense arc created by an inverter welder. This is only for AC transformer welders.
- Zirconiated Tungsten (white band). This was created as an alternative for pure Tungsten for transformer welders. Similar issues welding issues are presented as with pure Tungsten.

Purchasing Tungsten can be difficult. Local suppliers tend to put a premium price on Tungsten, and may be three times an online price direct from a distributor. In many areas, the choice of tungsten may be limited. However, many local welding suppliers are stepping up and offering competitive prices and range of selection, so don’t rule them out until you have checked. Also, there are some companies that may send you free samples to test, so be sure to investigate their product, and give them a chance as well.

GRIND THE TUNGSTEN CORRECTLY.

An improperly ground point on tungsten is a cause of many issues with arc stability, arc directability, and penetration. A bench grinder and a fine-grit stone dedicated for tungsten sharpening is all you need to sharpen Tungsten and is the age old standard. There are special hand held grinders that feature diamond stones with slotted guides, designed to hold the tungsten at the exact desired angles. A dry chemical sharpener “dip” is available and is inexpensive. When properly swirled, it does an excellent job in seconds. With practice, it can deliver a superior result. As a bonus feature, chemical sharpening can be done without getting up from the bench-top and without removing the tungsten from the cup. Please note: the Tungsten has to be red hot before being dipped and swirled in the chemical.

⚠ WARNING



Wear safety glasses and leather gloves while grinding tungsten or serious injury may occur. On occasion tungsten may split or shatter. Do not breathe or inhale tungsten dust. Do not use a angle grinder to grind!

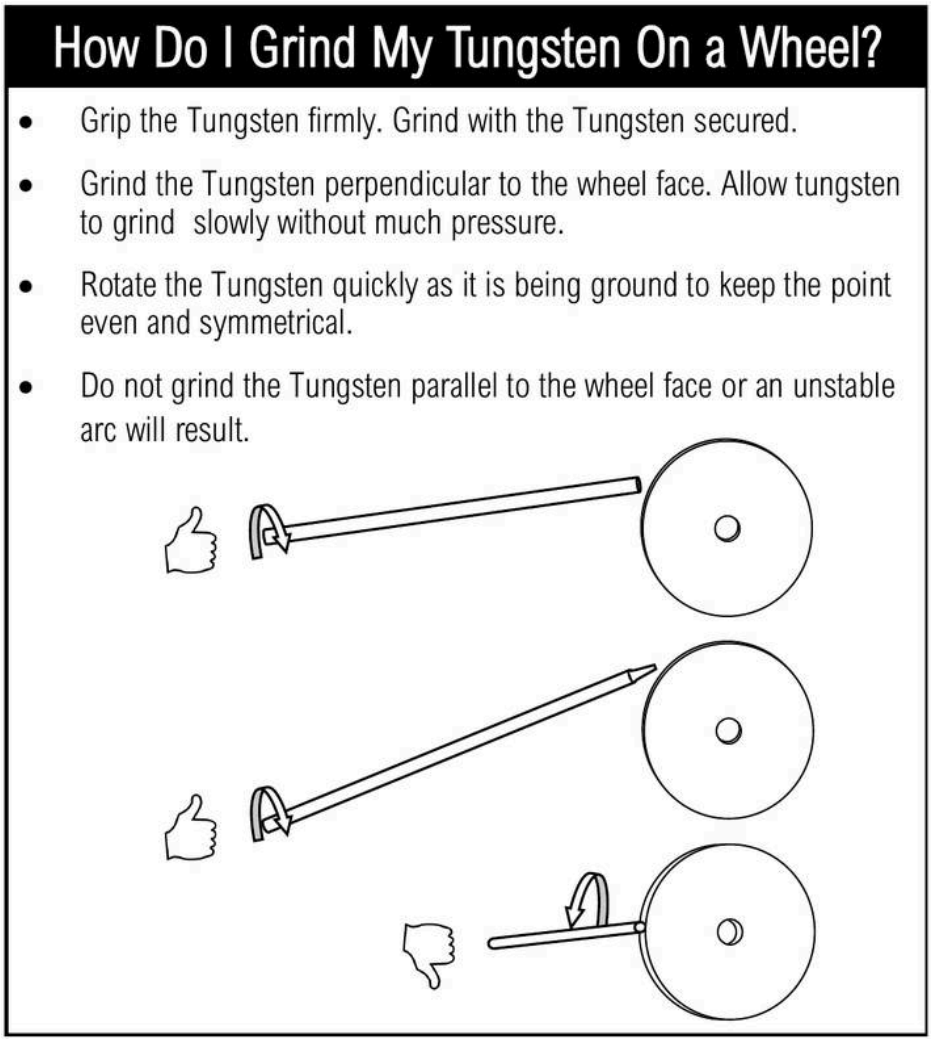

Choosing the proper grind angle is important to achieving the weld penetration, bead appearance, and arc-cone width that you desire. While there is no true one-size-fits-all angle, there are some general rules of thumb to observe and follow:

- Always grind in-line with the length of the tungsten. Never make a radial grind that leaves marks on the tungsten in the direction of the grind. Radial marks will cause arc instability. Never grind with the tungsten held parallel to the stone edge face.
- For most applications, grind a point that is 2 – 2.5 times greater in length than the tungsten is wide. This will create an angle of about 30 ° to 35 ° .
- For higher amperages, you will want to put a slightly truncated tip on the tungsten. This prevents the tip from dropping into the metal.
- Grip the tungsten firmly. Slowly rotate it while grinding.

Depending upon what arc properties you are looking for, you may periodically want to regrind your tungsten to maintain optimal arc characteristics.

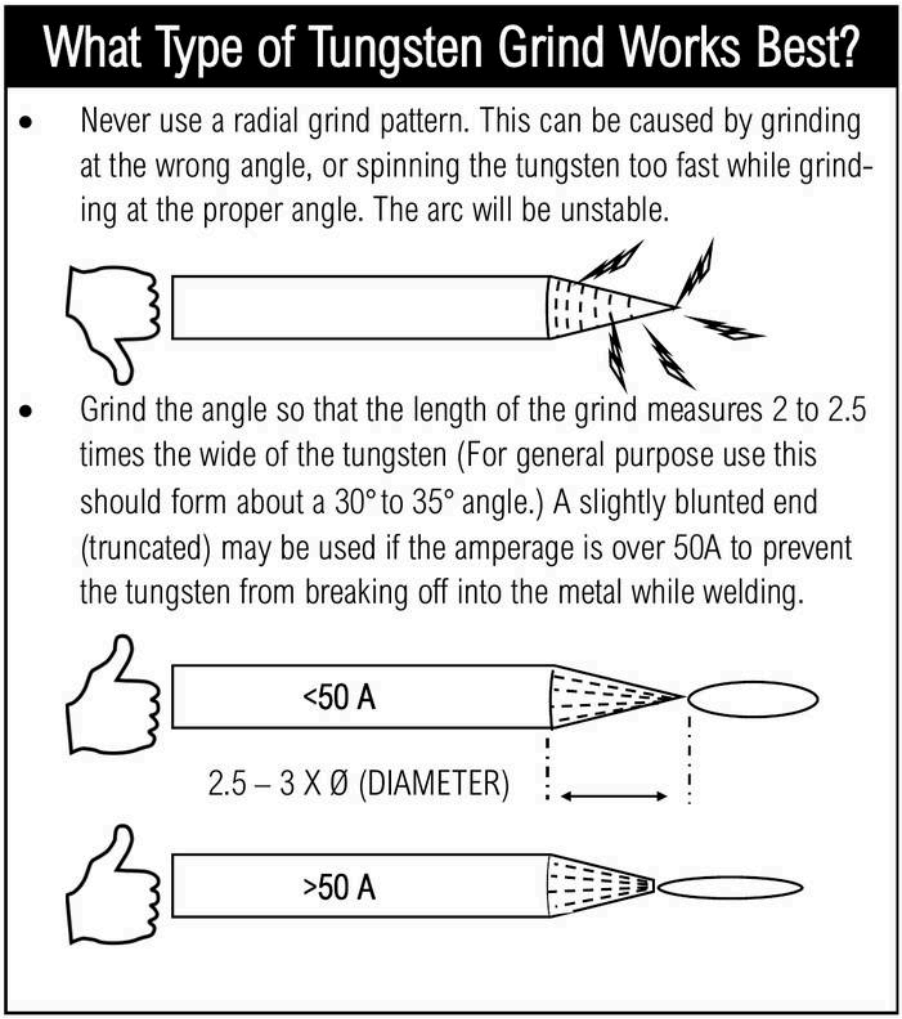

What Size Tungsten Do I Use?

Everlast uses a Live Lift-start system on this unit. This system is able to handle several different sizes of Tungsten. Clean arc starts are related to the size of Tungsten and the amperage used. But clean arc starts can be elusive becuase the tungsten type, tip angle and grind preparation will ultimately affect the arc starting capability of the tungsten. Amperage carrying capability is also size dependent. Each type of Tungsten blend will slightly vary in amperage handling capability and range of Amperage that is best for use. However, the overall ranges will greatly overlap between different types of Tungsten. The differences will be seen on the extreme edges of the range.

In general, consider the information below for selecting tungsten diameter. The list below is not the absolute maximum range of the Tungsten, but a reliable recommended range. It is a good practice when you approach the maximum limit of the Tungsten's capability in terms of amperage, that you switch to the next size up for best point retention and arc characteristics.

- 2-15A: .020" (.5mm)
- 10-70A: 1/16" (1.6mm)
- 15-200A: 3/32" (2.4mm)
- 30-250+ A 1/8" (3.2mm)

10 Setup, Navigation & Programs

General setup and use, navigation, saving and recalling programs.

GENERAL INFORMATION ON SETUP AND USE.



Selecting the Process.

At the top of the panel (1) use the process selector buttons to select the desired welding or cutting process. Use either the right or left arrow directional (◀ ▶) buttons to advance to the next process. Pressing the left or right arrow button too quickly multiple times in succession may cause the LED to appear to skip a process. Advance through the processes at a moderate, deliberate pace. If desired welding process is accidentally passed or skipped over, instead of cycling back through all the processes, use the opposite directional arrow button to scroll back to the desired process rather than scrolling all the way through again.

Navigating the On-Screen Menu.

The LCD screen is divided visually into a right and left half (2) by a vertical green bar on screen and black line above and below the screen. The left half side is controlled by the left side panel controls. The right half is controlled by the right side panel controls. The left side left (3) left pointing and down pointing arrows ( ) are used to navigate the left half of the screen and the right side (4) right pointing and down pointing arrows ( ) are used to navigate the right half of the screen. The left and right control knobs (5,6) are used to increase or decrease the selected parameter value of that side or to change the status of a function of the related side. The menu is also divided horizontally into 2 functional areas. 1) The top tier, or main display/default parameter display area, and the two lower tiered rows of parameters and functions.

There are two types of information located on-screen in the two lower tiered rows (7,8) of the on-screen menu: Parameters and Functions. *Functions are menu items that may change in status, such as ON/OFF, or Gun Selection. Parameters are menu items that change in value throughout a range such as pre-flow time or inductance percent.* Some selectable items on the menu screen serve both as functions and parameters. For example, the Spot weld function can be set to “OFF”. That indicates the status of the function. But when selected and the control knob is rotated, and the status is changed to “ON”, the function automatically changes to represent the parameter value and displays the seconds.

Understanding the Anatomy of the Menu Screen.

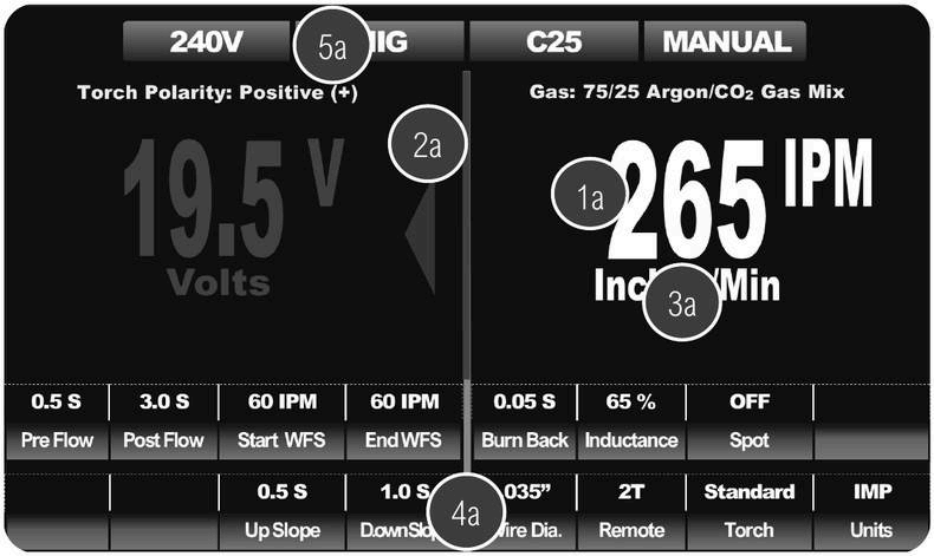

Quick Steps to Setting-Up the Welder.

1. The main display in the upper area serves to display the status, or value of a function or parameter. (1a)

- After startup, while welding or when the unit is not in the adjustment mode, Voltage is displayed on the left side of the menu screen and the Wire Feed Speed (IPM or M/M) or Amps on the right side of the menu screen. These are the default parameters displayed unless the unit is in adjustment mode and other parameters or functions are selected for adjustment. These default parameters can be adjusted simply by turning the relevant side control knob. The display will turn red to indicate adjustment
- After adjustment is finished and no further adjustment or changes are made, the unit will re-enter the default mode within approximately 5 seconds and display the Voltage and Wire Feed Speed/Amps.

2. Entering adjustment mode allows the user to make changes to all functions statuses and parameter values.

- To enter the adjustment mode, press once on the down arrow key (▼) on either the right or left side, depending upon which side the desired function or parameter is located on. This will turn the main display on that side red in color, the middle vertical line will turn red and either a left or right red arrow (or)will appear to indicate which side is ready for adjustment. (2a) *Alternatively, to enter the adjustment mode, a slight turn of the control knob will enter the welder into the adjustment mode unless the default displayed is non adjustable and displayed in green (TIG/Stick modes).*
- Continue to use the down arrow key (▼) to navigate vertically down to the desired row.
- In TIG and Stick modes, a single press on the down arrow on the left side will automatically navigate to the first lower row.
- Use the left or right arrow button (or) to navigate over to the desired parameter or function to highlight for adjustment.
- The middle red line will extend to the row and over to the desired parameter and the selected parameter will be highlighted in red.

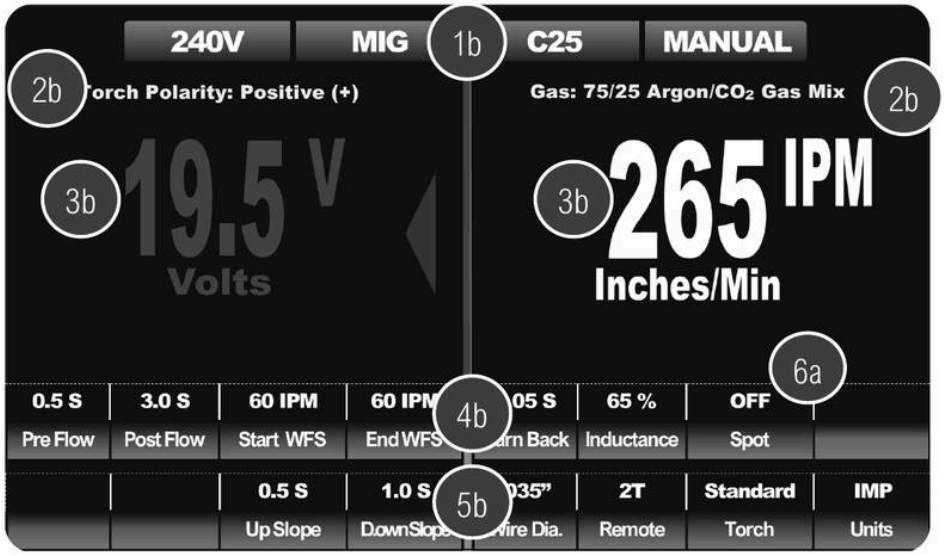

3. The control knobs are used to increase or decrease a selected parameter value, or make a status change in a selected function.

- Use the control knob on the side closest to the desired function or parameter to make changes to status or value.
- When making large changes in value to a parameter, press in on the control knob while continuing to turn it to make larger increment changes in value. This will speed up the adjustment process.

Detailed Menu Information and What to Expect During Adjustment

The menu screen utilizes a combination of symbols, words, numbers, colors and graphical indicators to assist the user in making adjustments. It is designed to create a fluid, intuitive and easy to understand interface for the user.

The menu is divided into several basic areas and conveys useful information to the user.

1. Top Information Bar. (1B) This area conveys information to the user about basic process selection, operating mode, and input voltage.
2. Torch Polarity and Gas Selection Information (2b). This row is in yellow lettering for contrast. This is area is designed to serve as a important reminder to the user to check and confirm both gas type and torch/gun polarity. The gas selection information may change in Steel MIG mode (C25) depending upon the settings of the unit. At higher volts and wire speed settings the gas recommendation may change from 75/25 Ar/CO (C25) to 90/10 Ar/CO2 (C10).
3. The main display area, or top tiered row (3b). This area on both left and right sides of the machine will display default Volt and Wire Feed Speed/ Amp settings unless the adjustment mode is entered into. During active welding, it will also display the actual measured Volt and Amp output of the machine. During adjustment, the display will reflect the chosen parameters and values of the parameters. During adjustment, the main display area values and parameters will change color to red. Appoximately 5 seconds after adjustments are completed the main display area will revert to the default setting and colors.
4. The lower parameter rows/tiers. (4b and 5b) This area displays all the information related to adjustable parameters and selectable functions of the unit. *In the PowerSet mode, only one line may be displayed due to the simplified input design.*

When a parameter or a function is selected, the screen will display the value or status of the function in two places:

1. At the top of the screen in the main display area.
2. Just above the selected parameter in the lower rows

The value-based parameters are also accompanied at the top of screen by the parameter's unit of measure in an abbreviated exponent form such as V, S, or % to as a reminder of the value being adjusted. Underneath the parameter value or function status, the actual name of the selected function or parameter appears. This redundant arrangement makes the display easier to read during adjustment and helps to eliminate bottle necks in navigation.

After adjusting is completed, the machine will default back to the main adjustment value (Volts, Amps or Inches per Minute) after approximately 5 seconds if no further input is made. The purpose of displaying the value or status of the lower tiered rows and the upper default value is to provide an at-a-glance view of all parameters simultaneously on the single screen at any time during operation. This eliminates the need for pop up menus and bottle necks in setup while promoting operator awareness of settings.

The screen makes use of colors to indicate condition, mode and status and serves to aid the user in general in interpreting the on screen information.

1. Green:

- The green color (4b, 5b) of the two lower rows/tiers of boxes indicates normal operation or that the unit is ready for use. The two lower tiered rows of boxes are normally green, unless the parameter of the box has been selected for adjustment by the user. Green is used to indicate a set function status or relay a parameter value to the user.
- Green is used at the top information bar to communicate basic status information. It is used to confirm the mode and basic operating information. *If the Voltage box in the information bar turns yellow, this indicates the unit is operating on 120V. This is to serve as a reminder that output is limited in 120V and some settings may not have a full range of adjustment or selection.*
- When the large numbers turn green in the top, main display area, this indicates the value cannot be adjusted. However, it is communicating an important measured value, such as TIG or Stick welding Voltage and OCV.

2. Gray:

- Gray, blank areas in the lower rows of boxes are non-selectable areas. These emptied boxes can be ignored and no function is assigned to them in the current menu configuration or process.
- In some cases a gray area will become an adjustable area if certain functions like Spot weld is selected for use. If so, the area(s) will turn from gray to green and will display additional parameters related to the function. When the items are green and the blank areas filled by additional parameter information, they are then adjustable. The grayed out areas help eliminate confusion over what needs to be adjusted. Some gray areas have no function and may only be a place holder and will not change status or offer adjustment. Due to the nature of each process, some areas will have more gray areas than others. In a couple of instances where a function is selected that limits the ability of other necessary functions, and the restricted function remains active, the area will remain green, but will not be adjustable.

3. Red.

- Red indicates the machine has entered the adjustment mode. The numbers/words at top of the screen, the middle vertical line, middle line extension and any parameter box on a row that turns red indicates that the machine is in adjustment mode.
- If a parameter box is highlighted in red, the main display area will display of the chosen function status or parameter value.

4. White.

- White letters or numbers in the main display area indicates that the unit is displaying the default setting and is not being adjusted.

- In any wire feed process, when both upper numbers are in white the unit is displaying welding volts (left side) and welding wire speed feed rate (right side).
- When the main display area is white this indicates the unit is not in adjustment mode and is ready to weld.
- In TIG and Stick modes, only the right Amp box will be displayed in white. The other box will be in green to indicate a non adjustable voltage value. When the white appears in only the Amp box, and the other side is in green, the unit has exited the adjustment mode.

5. Yellow.

- Yellow is used to convey important basic information.
- Yellow can also be used to alert the user to a change in status or warn of an unwise setting (PowerSet mode).
- In manual mode for steel the colors of the numbers may change when a wire begins to reach its short circuit limit and transitions to globular transfer and into axial spray transfer. The on screen recommendations for shielding gas will also change from 75/25 to 90/10. The information just above the main display area reminds the user to observe the indicated polarity and the gas type to use.

Why Are Some Settings Limited or Blank?

There are two basic reasons some settings are limited in adjustment or completely blank. The first reason is that the unit is being used on 120V and output is limited. With limited output, the machine must limit certain range of adjustments to protect itself from malfunction. In PowerSet mode this is obvious by the limit on selecting electrode /wire or thickness sizes. The second reason is that a function is not active or has been set to “OFF”. When functions such as spot weld are set to “ON”, the unit will add additional settings and allow adjustment of those functions or parameters.

USING THE PROGRAM MENUS AND MEMORY FUNCTION.

The memory function on this machine allows the user to save and name up to 30 different programs. (There are 30 programs but only 10 programs per page.) Not only can the programs be saved, they can also be locked to prevent unwanted or accidental tampering for WPS work requirements. The process to save and recall the memory is relatively simple. However, there are some differences in the way the machine is controlled from the main menu screens. There are no longer any left or right division of control in this mode. Only the right side control knob and Save/Recall Program button will be used for navigation and selecting. The PowerSet button is used for selecting or deselecting the lock function. Most programs will say “Empty” until they are filled by a program. But if there are some form of program stored, these were stored during factory testing and not intended to be functional settings. These programs can be saved over, after being unlocked. Any recalled program can be fine tuned or adjusted, but the new settings or changes made to the machine will not be kept.

NOTICE

There are no useful pre-stored programs on this machine except for the suggested settings in the PowerSet programming. Individual parameters, if they are present, are entered during the manufacturing process to serve as place holders and for testing the programming. Actual values entered may not be useable .

Navigating and Using the Recall Screen.

The program function consists of two screens: the recall screen and the save screen. Both look alike except at the top information bar location, the words “Recall” or “Save” are used. Be sure to notice which word is at the top so that the unit is in the correct screen to perform the action desired. The recall screen is used to “recall” or bring up a desired program for use.

The recall mode does not allow any saving or any permanent modification of the programming. A recalled program will allow adjustments to be made, but the base program cannot be modified unless it is unlocked in the save mode and completely resaved or saved over. Recall mode will always be a safe mode to use for any user since programming cannot be saved over in this mode.



1. To recall any program, quickly press and release the save program button (1). This may be done from any process, even if the desired process is not selected at the top of the selector. (The selected program will override the process selector and display the saved program and process.)
2. The Recall menu screen will appear and will be confirmed by the green “Recall” bar (2) at the top of the screen.
3. Navigate to the desired program by rotating the right side adjustment knob (3). A green bar will highlight the line chosen.
4. Press the left side adjustment knob (3a) to select and open the program. The screen will display the program and settings like a normal screen, but it will not allow it to be overwritten. The programming will allow the user to make adjustments, but these will not be permanent to the program.

NOTICE

If the recall mode is not being actively used, and no choice has been selected/entered by pressing the right adjustment knob, the machine will return back to the previous setting. It will not recall (bring up on screen) the program, even if it has been highlighted.

Navigating and Using the Save Screen.

The Recall and Save screen are similar but the Save screen allows programs to be stored and features the lock/unlock ( ) function which will allow a new program to be saved in the old memory slot.



1. To save, complete all normal setup for the process desiring to be saved. Make sure all settings are correct before proceeding to step 2.
2. To access the save menu screen, press and hold the save/recall button (1) for at least three seconds before releasing.
3. When the button is released the Save screen will appear and the green “Save” bar at the top of the screen will confirm the selection.
4. Navigate to the desired line by rotating the right side adjustment knob (3). Each line will highlight in green as the adjustment knob is rotated.
5. Each line will have either a lock symbol or unlock symbol (🔒 / 🔓) located on each line on the right side (4). This indicates whether or not the selected line is available for a new program to be saved. If the unlock symbol is displayed, this line will allow a new program to be saved. If a locked symbol is displayed, this line must be unlocked before saving. To unlock a line, quickly press and release the PowerSet button (5). The symbol will change to the unlocked status.



⚠ WARNING

If a line is purposefully unlocked, or left unlocked after saving a new program, this program will be subject to permanent change or over-writing without an extra layer of protection. If available, always save in an “Empty” space. If a new program must be saved over an old one, make sure that it has no value or future use or write down the settings so that the values can be re-entered in the future.

6. Press the left side adjustment knob (3a) to select the line and access the ‘ QWERTY” Popup key pad (6). Rotate the adjustment knob (3) to highlight a letter or a command (save or cancel). Press the adjustment knob (3) to enter the letter or number desired. Continue until the program name is complete or until the maximum character limit has been reached. *The maximum number of letters, numbers and other characters that can be entered to name a program is a total of 15 in any combination. The keypad will not hold more than a 15 total character program and will block more from being entered once the maximum is reached. To eliminate future confusion over which programs are which, be sure that program names are carefully chosen to be distinctive without exceeding the character limit.*



7. Once the program has been entered, rotate the adjustment knob (3)to save selection or press cancel to exit the screen. *If cancel is selected the program will not be saved on that line and the name or status of the line will not be changed.*

8. After selecting “save” on the popup key pad, the program screen will reappear with the newly named program. As an extra layer of security, and to prevent unwanted or otherwise accidentally tampering with the program, press the PowerSet button (5) to lock the program as soon as the program returns from the keypad menu screen . *It is always a good idea to keep all programs locked for program integrity.*
9. If no further input is made (i.e. locking or selecting another line) after saving the program, the menu will default back to the welding mode after approximately 5 seconds. Instead of waiting for the 5 seconds to expire, quickly press and release the “Save/Recall” button (1) once all programming is complete and saved. This will quickly exit and return to the menu normal welding/adjustment mode.

11 Manual & PowerSet Menus

MIG, flux-cored, DC TIG and stick menus.

USING THE MANUAL MENUS

Each process menu operates in the basic same way. Navigation is similar between all the functions. See below for menus and notes about navigation of each of the following menus.

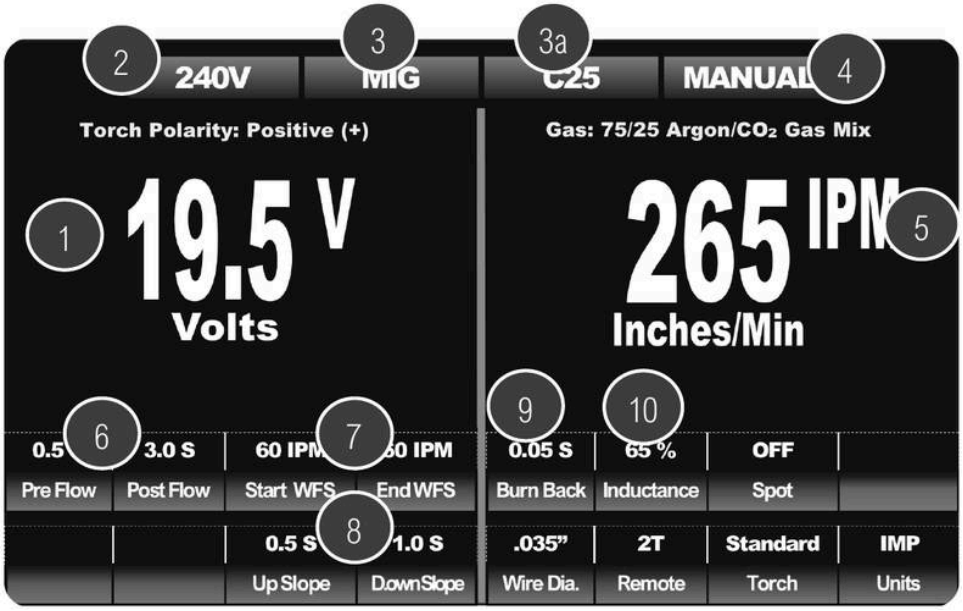

MIG/Flux-Cored Manual Menus:

The MIG manual menu is essentially the same between all MIG process selections, whether selecting C25, C100, Aluminum, or Stainless Steel.

1. Main Left Display, Default Voltage Display. Adjust the voltage with left adjustment knob. To adjust other parameters or functions, enter the adjustment mode with left down arrow key to navigate to the desired parameter to highlight and enable adjustment. When a parameter or function is selected for adjustment, the numbers will turn from white to red. Voltage is the default setting of the left side. After 5 seconds of no input or adjustment of other parameters or functions, the selected setting will default back to the Voltage setting and exit adjustment mode.
2. Voltage Input Confirmation. Voltage Input Confirmation. This confirms the correct voltage to be supplied to the machine. The correct Voltage is 240V. If 220, 230 or 208V is supplied, the Voltage will still read 240V.
3. Process and Gas Reminders. When viewed together, both 3 and 3a reminds the user which process has been selected. A selected MIG process will always display with either C25 (75/25 Ar/CO_2 for Steel), C100 (100% CO_2 for Steel), Mix Gas (98/2 Ar/CO_2 for Stainless/Inox), Ar Gas (100% Argon for Aluminum), or No Gas (For Flux-Cored on Steel) in wire feeding modes.
4. Manual/PowerSet Mode. This indicates which mode the machine is operating in, whether in full manual mode or in PowerSet mode which is a synergic, more automated mode. In PowerSet mode, many functions may not be available for adjustment and will be preset. (See the MIG PowerSet section).
5. Main Right Display, Default Wire Feed Speed Display. Adjust the wire feed speed (WFS) with right adjustment knob. This display can indicate the wire feed speed in either Inches Per Minute (IPM), Meters Per Minute) M/Min or Amps. This is the default setting of the right side. Other parameters and functions will be represented in the

display when in adjustment mode. When the Wire Feed Speed or other parameter is selected for adjustment the display will turn red in color. After 5 seconds of no input or adjustment of any parameter or function, the selected setting will default back to the Wire Speed setting and return to white. *While actively welding, the display function will change to read actual measured amperage output.*

6. Pre-Flow/Post Flow Timers. Pre and Post Flow provide adjustable shielding gas flow time before and after the weld. This is important to reducing contamination in the weld. The arc start and wire feed will be delayed slightly by the amount of pre-flow time used but helps provide a gas envelope around the weld. Post flow helps cool the torch and provides shielding around the weld after the arc is terminated. This helps prevent oxidation of the weld. NOTICE: In gasless Flux-Cored mode, Pre and Post Flow will be unavailable for adjustment and the space will be blank. Typically a setting of about 0.5 seconds for Pre-flow and 3-5 seconds for Post Flow are used.
7. Start/End WFS. The starting wire feed speed helps the unit start cleanly and smoothly. It can be used with up-slope to helps to improve the quality of the start and transition into the welding amperage. This provides a type of “soft start” which is similar to a hot start setting. The end wire feed speed is used as finishing wire speed feed, and is used to fill the crater left at the end of the weld at arc termination. To reduce the impact of this function, set to 60 IPM (.5 M/M) and set up and down-slope to 0.0 Seconds.
8. Up/Downslope Timers. The slope is used to ramp wire speed up or down, at the start of the weld or at weld termination. Up-slope is used with Start Amps to increase wire speed (or decrease it, depending upon the setting desired) from the starting wire feed speed. Down slope is used to decrease wire speed from welding wire feed speed to the end wire speed. This provides the time necessary to complete the crater fill process at the end of the weld. Either Up or Down Slope can be set to “0.0” if the function is not desired.
9. Burn-back. This is the amount of time the arc stays on after the wire stops feeding. It is used to help prevent the wire from sticking in the weld and to reduce the need for constant trimming of the wire before restarting. Use a setting of .02 to .2 seconds to begin with for most applications. Smaller diameter wires need less burn-back time
10. Inductance. IMPORTANT NOTICE FOR EXISTING EVERLAST MIG OWNERS AND USERS: This improves the wet-in of the weld. A high setting will result in a very poor arc, with a high pitch. The result will be a raised ridge in the middle and poor wet-in. Excess spatter may be observed. The result of too low of a setting will result in a very fluid, flat puddle. The pitch will be raspy and rough sounding. Starts will not be as smooth. Generally, a setting of 25 to 35% is a good starting point on Steel with C25. With Steel and C100, 10 to 20% is a good starting point. Generally, pure CO2 is not very smooth on many welders, but with inductance control, high quality welds can be achieved. Stainless requires the lowest inductance with 10% or less. Aluminum can range depending upon the wire from 40 to 60% or so. Flux-Cored behaves a little differently with a 35 to 60% starting point. Of course, different weld positions, joint designs and thicknesses of metal can affect the inductance requirement slightly. *Setting inductance is crucial. It is as important as setting proper Voltage and Wire Feed Speed. Inductance will not typically change very much but may change between users if different styles are preferred. In laymen’s terms Inductance should be thought of as the third leg of a three legged stool, with the other legs being Volts and Wire Feed Speed/ Amps. All three equally contribute to making a weld but without anyone component, the weld cannot be made.* NOTICE: The unit will ship with the last settings used in performance testing. Often Inductance will be set to 0% or 100% after testing the range of function. If the unit is used at extremes for Inductance, bad arc quality will result.

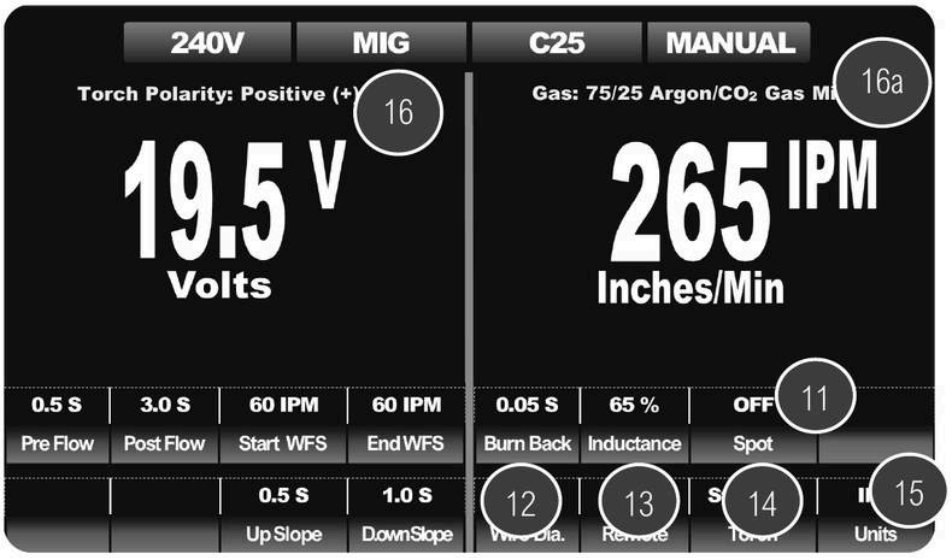

11. Spot and Stitch Timers. *The Spot timer must be turned on for the Stitch function to appear. When Spot is turned on, the empty box to the right of Spot will be enabled and will be labelled as "Stitch." When Spot is turned off as shown in the picture above, the Stitch function is no longer selectable.* The Spot function is a timer that sets a defined "Arc on" time. The timer allows the arc to stay energized for the period set. After the time has expired the arc will automatically stop, if the trigger is still held down. While it can be used with 4T, the spot function is best used in 2T mode, especially for relatively short tack welds. NOTE: Keep in mind that If the spot timer is turned on accidently, the wire feed will stop suddenly soon after the trigger is pressed. In fact it may barely feed and just seem to quit if the time is set low. This is normal, but often a source of tech support calls. If your wire feeder stops feeding unexpectedly after the trigger is pressed, check this function first. Stitch is defined as "Arc-off" time. This function is dependent upon the use of the Spot weld function. While the Spot function may be used independently with the Stitch timer set to "0.0", the use of the Stitch is predicated on the use of the Spot Timer. Using the spot timer together with the stitch timer creates an endless "On and Off" cycle of the arc for as long as the trigger is held. The Spot Timer sets an "arc-off" interval between a series of spot welds as the trigger is continued to be held down. This is useful for tacking up long seams on thin sheet metal such as body panels. It helps to provide regular spacing between the weld as long as the forward travel speed provided by the user remains fairly consistent.

IMPORTANT: If the spot is accidentally engaged, the user will experience a short cycle of the arc. This typically happens with new or inexperienced users or after another user has made adjustments. If the arc suddenly dies after the arc is started or starts/stops starts, check and make sure the Spot timer is set to "OFF".

12. Wire Diameter. The input of the wire diameter helps to put guide limits around output for the wire and make suggestions in gas selection when the wire approaches the short-circuit limits and begins to transition to globular/spray transfer. It also calibrates the welder programming so that it can properly read Amps if Amps is selected in the unit menu.
13. Remote/Torch Trigger Function. This controls how the welder reacts to the torch trigger in MIG mode. The functions, while similar will vary slightly from the TIG process. In 2T, the trigger is pressed and held to weld. In 4T, the trigger is pressed briefly to start the arc, then released to continue to weld. The weld is continued without the torch trigger being held down. The trigger is once again pressed, held and then released to terminate the arc. See more detailed 2T/4T Remote information and explanation found later in this manual.
14. Torch Type. Select between the main MIG gun, Push Pull and Spool Gun function. NOTICE: Operation with Spool and Push-Pull Guns yields control of WFS/Amps to the control knob on the gun.

Units. Everlast recognizes that there is a need to provide different 15. units of measures to different industries and regions of the world. This unit is equipped to read in Standard Imperial (US or English) units such as inches per

minute or decimal inch equivalents. The unit is also equipped to read in Metric (SI) units such as Meters/ Minute and millimeters. Choose between MET (Metric) or IMP (Imperial) on the screen to convert all relevant measurements to the desired or required units. This can also read in Amps.

16. Reminder/ Information Areas. This informs the user about which torch polarity (16) to use and which gas to use (16a). Both the Torch polarity and gas recommendations are subject to change according tothe process used and the actual output of the machine. If improper operation is observed, check this area and the information it is displaying and confirm the polarity and gas mix being used. These areas are not selectable or adjustable.

DC TIG MANUAL MENU

The DC Lift Start TIG manual menu is a very basic TIG menu. Since it is lift start only with no automatic gas flow support, there are no adjustments other than for Amperage. This is considered a basic lift start type intended for a "DC TIG Rig" design. *A TIG rig is a basic design where the gas flow is controlled manually on the torch by manually twisting a valve to open and close gas flow. The torch is connected direct to the machine for power but gas is not routed through or controlled by the welding machine itself.*

Pulse, and other functions are eliminated in this model. No foot pedal control is available because the amperage is only set on the panel. DC Manual lift start TIG requires the user to briefly touch down and lift up of the Tungsten to start the arc. This type start is not as easy as a touchless HF Start, and may require practice to perfect.

NOTICE

The tungsten will always be live, so take precaution not to accidentally touch the tungsten to the metal until you ready to start the arc.



1. Main Left Display, Default Voltage Display. The voltage displayed in the Main display in TIG mode is a measured reading of actual output. It is not adjustable. The voltage will always be displayed in the color green to remind the user that the voltage is non-adjustable. The left control knob will not allow adjustment of voltage. It serves no other function in this mode.
2. Voltage Input Confirmation. Voltage Input Confirmation. This confirms the correct voltage to be supplied to the machine. The correct Voltage is 240V. If 220, 230, or 208V is supplied at the outlet, the Voltage will still display 240V unless the voltage is too high or low.
3. Process Reminders. When viewed together, both 3 and 3a reminds the user which process has been selected. For TIG, DC will also be highlighted on this machine to remind the user that this unit is DC, and not AC mode. (This TIG supplies DC output only for TIG. It is not suitable for welding Aluminum or Magnesium.)

4. Manual/PowerSet Mode. This indicates which mode the machine is operating in, whether in full manual mode or in PowerSet mode which is a synergic, more automated mode. (See the TIG PowerSet section).
5. Reminder/Information Area. The area in yellow is designed to inform or remind the user to check or change polarity and to confirm which shielding gas (5a) should be used. For TIG, this area will remain unchanged. Torch polarity in TIG mode will always be negative (-). The recommended shielding gas will always be 100% Argon.
6. Main Right Display, Default Amp Display. Adjust with right adjustment knob. By default this display area indicates the Amperage. In adjustment mode, the function or parameter selected will display and the display numbers/letters will turn red to indicate adjustment mode. After 5 seconds of no input or adjustment of any parameter or function, the selected setting will default back to the amperage reading and return to the default white color. *While actively welding, the display function will change to read actual measured amperage output.*

DC Stick Manual Menu:

The stick manual menu is simplest menu of all the manual menus. However, there are a few functions that the user should take note of. Ignoring these setting and not providing a setting for them, may make arc starting difficult or may make maintaining a satisfactory arc impossible.

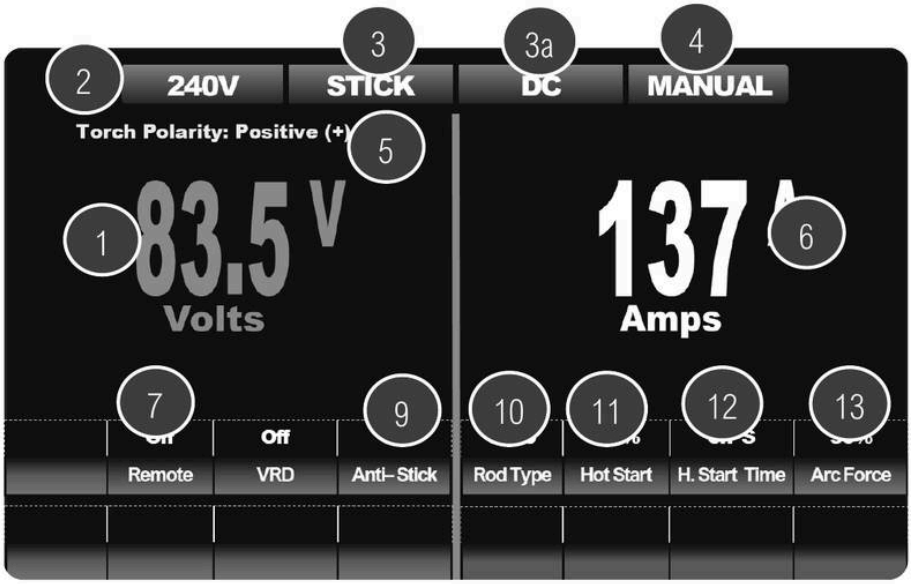

1. Main Left Display, Default Voltage Display. The voltage displayed in the Main display in Stick mode is a measured reading of output. It is not adjustable. The voltage will always be displayed in green color to remind the user that the voltage is non adjustable. The left control knob will not be able to adjust voltage. While adjusting other parameters, the voltage will change function and will display the selected parameter. It will also turn red to indicate it has entered the adjustment mode.
2. Voltage Input Confirmation. Voltage Input Confirmation. This confirms the correct voltage to be supplied to the machine. The correct Voltage is 240V. If 220, 230 or 208V is supplied the Voltage will still read 240V.
3. Process Reminders. When viewed together, both 3 and 3a reminds the user which process has been selected. For Stick, DC will also be highlighted on this machine to remind the user that this unit is DC, and not AC mode. (This welder supplies DC output only for Stick)
4. Manual/PowerSet Mode. This indicates which mode the machine is operating in, whether in full manual mode or in PowerSet mode which is a synergic, more automated mode. In PowerSet mode, some functions may not be available for adjustment and will be preset. (See the Stick PowerSet section).
5. Reminder/Information Area. The area in yellow is designed to inform or remind the user to check or change polarity and to confirm which shielding gas (5a) should be used. For Stick, this area will remain unchanged.

Torch polarity in Stick mode will always be positive (+). Some rods that may allow use on electrode negative, but those are typically not considered standard types or preferred polarity in most cases.

6. Main Right Display, Default Amp Display. Adjust with Right adjustment knob. By default this display area indicates the Amperage. In adjustment mode, the function or parameter selected will display and the display numbers/letters will turn red to indicate adjustment mode. After 5 seconds of no input or adjustment of any parameter or function, the selected setting will default back to the amperage reading and return to the default white color. *While actively welding, the display function will change to read actual measured amperage output.*
7. Remote. The remote function allows the stick function to be used with an adjustable remote to control amperage at the electrode holder.
8. Voltage Reduction Device (VRD). The VRD acts as a safety device by lowering the OCV while the unit is not welding to below 24V. This helps prevent accidental shock and electrocution.
9. Anti-Stick. The anti-stick helps prevent the rod from sticking fast in the weld puddle by reducing the output when it is shorted accidentally while welding. This makes the stuck rod easier to remove. It will not actually prevent the rod from sticking, but it will help prevent it from sticking fast in the weld and flaming up.
10. Rod Type. This feature helps improve overall rod performance and provides a base for the machine to fine tune parameters.
11. Hot Start. This is a rush of amperage over the set amount that is provided to help improve the starting of the rod. NOTICE: Hot Start may be limited and seem to be muted due to the amount of amperage available left over to operate the hot start. The closer to the maximum amperage the machine is set, the impact of the hot start will be softened. Typically iron powder and titania fluxed rods require less than cellulose. For iron powder/titania fluxed rods, 40-50% is typical. For cellulose 70-90% may be required. Low-Hydrogen rods that are not properly stored or used and are considered “wet” (open, non heated storage of greater than 4 to 8 hours), may require higher settings similar to cellulose to keep the rod burning properly. But fresh rods or rods stored in rod ovens will use the lower settings.
12. Hot Start Time. This is the duration of the Hot Start This keeps the hot start active and helps heat up the puddle.
13. Arc Force. As the rod is held closer, the arc voltage will drop and the total wattage will fall. In some cases this may cause the rod to stick in the puddle. The Arc Force offsets this by supplying additional amperage (over the amount set) to help maintain welding wattage. This allows the user to use a tight arc, to prevent impurities from entering the weld. The Arc Force will be triggered when welding voltage falls below approximately 20V. Adding Arc Force will improve the feel and wet in of the puddle. Typically iron powder and titania fluxed rods require less than cellulose. For iron powder/titania fluxed rods, 20 to 40% is typical. For cellulose 60-85% may be required. Low-Hydrogen rods that are not properly stored or used and are considered “wet” (open, non heated storage of greater than 4 to 8 hours), may require higher settings to keep the rod burning properly. But fresh rods or rods stored in rod ovens will use the lower settings.

In Manual Welding Modes, What Are the Welder's Default Settings?

The welder is designed to include many extra features and functions in the Manual mode that aren't included with basic welders. These extra features are meant to give the user the maximum amount of control over the weld performance. But along with maximum amount of control, a user should have the knowledge and skill to use them properly.

The unit has no factory default settings except for the specific programming offered in the PowerSet mode that either offers suggested settings or has some functions fixed or locked. With no default settings, this also means there is no way to "reset" the machine to factory settings. However, any adjustable setting in PowerSet mode also needs to be properly set. Any ignored setting can lead to malfunction or poor welding performance of the machine. If you are not comfortable with setting the unit up manually completely, or do not have time to go through each setting to set it properly, it is suggested that you use PowerSet mode instead. Keep in mind, that PowerSet still requires setup of the features that are not fixed or locked by the programming.

The unit is programmed during manufacturing and is tested before being shipped. The programming, in many cases, requires place holder settings to be loaded into the welder. Depending upon the last test performed with the unit, the welder may not have a workable combination of settings entered, and any adjustable setting entered should not to be considered a default or suggested setting unless this manual states specifically otherwise.

In many cases there are no "right or wrong" settings. Some settings like Pre-Flow and Post Flow are ultimately up to user preference, even though some pre flow and post flow should always be used. However, settings like Inductance have a range of workable possible settings. But in a case like this, an extreme setting (even though the welder allows it) will produce unsatisfactory welds.

Remember:

Any setting or value present in the parameter area cannot be ignored and must be set or adjusted by the user.

Any green highlighted setting is an active setting that must be set and adjusted properly. Any setting present should not be considered a default value. If any setting present is ignored or not set to properly poor performance may result.

Some of the PowerSet mode suggested settings will offer a default setting, but may not be optimal for the user and must still be adjusted to obtain best performance These settings still rely upon accurate entry of basic parameters.

If there are gray highlighted blocks, these settings are either automatically controlled or are not used with the selected process.

Using the PowerSet Menus.

The PowerSet function is an advanced synergic function designed to provide the user with a simplified set up process by using a combination of color-coded graphics and preprogrammed settings based on industry recommended standard values. In addition to the recommended settings, it provides an adjustable setting range above and below the recommended setting to allow the you to fine tune the setting to better suit the application and your welding style. It can also be used as a general guide for setup parameters in the manual mode and eliminates the need for complicated charts and user guides. PowerSet is not meant to be the solution to every welding

situation. Position, joint design, and user welding style all affect the accuracy of settings. Additionally, if input voltage is in the lower part of the acceptable range, it may affect the accuracy of the PowerSet mode.

To use the PowerSet menu properly, the user must input basic operating parameters, such as wire type (selected by the process), wire diameter and material thickness to provide useable results. These are all the same type settings you'd have to reference in a user setup chart. Although the settings provided to the user are based off of industry accepted "norms," the settings provided in the programming may not work for every user in every application. The programming is designed to provide a target recommended setting, but the welder also provides a range of adjustment higher and lower than the target setting value to allow fine tuning to accommodate differences of joint design, user welding style and weld position. Although the range of adjustment is fairly generous, there are limits set by the machine's programming to attempt to keep the unit from going too far off track. The programming will block further adjustment after the limits of the range are reached. The PowerSet is also equipped with visual graphical aids to help the user see and visualize the settings. The settings will have a tapered graphic is also color coded to indicate a normal range of a setting and guide the user further in fine tuning. As the setting is fine-tuned, away from the recommended settings and toward the setting limits, the graphic will eventually change from green to yellow, and finally to red to indicate the general "safeness" of a permitted adjustment.

Keep in mind that synergic settings cannot take into account every variable and allows the user independent control to manually correct the provided settings to accommodate differences in welding environment, user experience and skill. Remember: weld position, joint fit-up, and cleanliness all are "hidden variables" that can make a difference in the accuracy and effectiveness of the PowerSet settings. There is no perfect synergic system for every eventuality. The settings provided are given based off of in-position welding, good fit-up/joint design and assumes at least an intermediate level of understanding and skill of the operator. The PowerSet function has been tested for acceptable function under industry recommended operating conditions and parameters for general purpose welding.

It should also be noted that welds that are performed on metal plate greater than 1/4" are generally performed in multiple passes for best results in short circuit MIG welding. This is similar to TIG and Stick maximum recommendations as well for single pass. The unit does offer higher settings and may recommend a gas change as the wire speed and voltage enter the Globular and Spray transfer range to perform single pass welds (MIG C25 process selection). If the user is not informed on the differences between the types of MIG wire transfers, and does not understand the requirements and expectations and limits of different forms of wire transfer and observe the recommendations given, the unit may not perform satisfactorily.

NOTICE

To prevent a completely unworkable setting, wire diameter, tungsten size or electrode capability, selection choices of inputs and some parameter adjustments may be limited or completely blocked to prevent a mismatched setting that may cause the welder to exceed the Amp capacity of the MIG wire, TIG tungsten, or Stick electrode. This is intended to remind the user that there are physical limits to choices of wire, tungsten or electrode (welding rod) can support and to help prevent an "unworkable" setting recommendation. Even with these limits, it does not always mean that performance will be perfect or desirable. Near or at the physical limits of wire or electrodes (or input voltage), spatter may increase and weld performance or arc stability will decrease. The limitation of adjustment with some settings or certain combinations of user input is not a malfunction of the unit.

PowerSet Menus Items Shared in Common Between Processes.

In comparison to the Manual Menus, the PowerSet Menus are simplified in regards to the amount of controls and functions needed for proper adjustment. The menu is reduced to more basic functions, but still allows all critical adjustments to be made. The rest are preset by the factory or all together eliminated. The basic layout, operational information provided on screen and method of navigation/adjustment are mostly unchanged from the manual mode, so the information will not be repeated, unless there is a difference in function or process of setup.

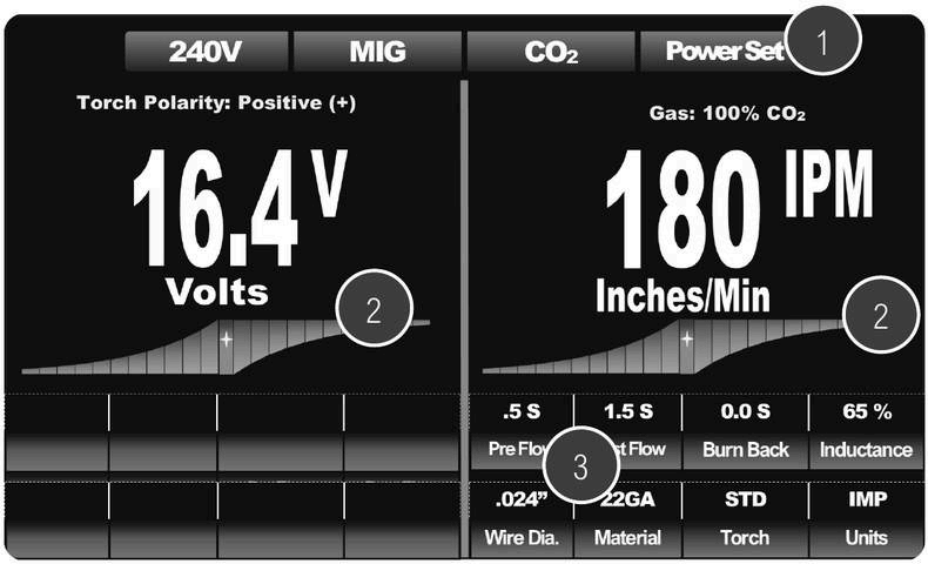

1. When the PowerSet mode button is activated, this box will change from Manual to PowerSet to confirm the setting.
2. The adjustment range graphic is designed to aid the user a visually by indicating how the adjustment is affecting the setting. Depending upon the parameter being adjusted, the graphic may change in appearance. For Volts, Amps and Wire Feed Speed, the graphic appears as shown above in the picture. As the user makes progresses further away from the recommended adjustment, the graphic will also change color, turning from green to yellow and finally to red. The red and yellow areas indicate that the adjustment is not recommended and serves as a general warning that performance may not be optimal, even if it is allowed. For other adjustable parameters or input functions the graphics will change in appearance to better illustrate the. Input functions such as Wire Diameter or Material thickness have no target or recommended value and simply relay the chosen input value in the form of a graphic as a visual aid. Other basic parameters such as torch or pre/post flow have no recommendation so there is no adjustment graphic for those. For specific parameters, such as inductance, the graphic indicates the recommended preset and allows the user to make adjustments, but indicates settings that may not be ideal as the graphic slopes up or down, away from the center setting. Other types of graphic representations are:

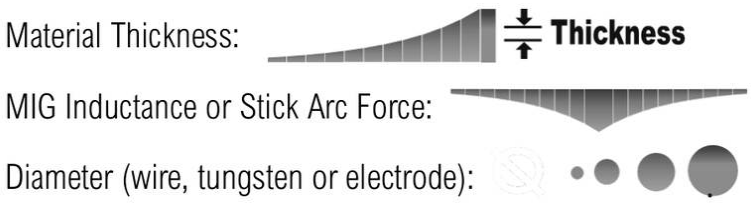

3. PowerSet requires user defined input parameters.

- For MIG, the required input parameters, after selecting the correct process (for wire standard feed processes, the correct wire and gas type are assumed by the selection of the wire process) are the input of the wire diameter and material thickness. The recommended Gas cannot be changed. If another gas is used, it may affect accuracy of the PowerSet Programming, and may render PowerSet mode useless. It will not harm the unit but it may require the unit to be operated in manual mode.
- For TIG, the required user input parameters are Tungsten Diameter, and Material Thickness.
- For Stick, the required user input parameters are Rod type (Electrode Selection), Rod Diameter and Material Thickness.

MIG, TIG and Stick PowerSet information.

MIG/Flux-Cored:

Standard MIG and Flux Cored processes are similar processes and appear similar with only minor differences in the programming in the PowerSet mode. The appearance and layout of PowerSet functions is similar and both are treated the same in this section. In the PowerSet mode, while there are items that correspond to the manual mode, the arrangement and number of adjustable functions is different. Overall the number of adjustable functions are reduced. The balance of the functions that normally appear in the manual mode are either fixed as a preset in the programming or automatically set themselves based off the user inputs. There are a some functions that have limited ranges of adjustment to reduce the potential for operator error and/or poor machine performance. Some ranges of adjustment (or selectability) are reduced based of the exact operator input such as the wire diameter. The wire diameter is governs/limits the maximum selectable thickness of material and limits the maximum wire speed. Also, the range of inductance ( ) is limited to an range that will typically produce the most acceptable results. The center target setting for inductance will vary based off the wire feed process selection. This range will not always be symmetrical from the center target. These limits in range or presets do not always prevent a “bad” setting from occurring if the user inputs create a setting is already straining the wire’s capacity at either the physical minimum or maximum limit if the Wire Feed Speed or Voltage is overridden manually with a value that exceeds the physical limit of the wire. It should be noted again, that not every setting offered by PowerSet mode will fit every situation and fine tuning may be needed. In some cases, it may be necessary to revert to manual mode to gain enough adjustment to get the performance expected by the user.

1. Main Left Display, Default Voltage Display. Adjust the voltage with left adjustment knob. Voltage is the default setting of the left side. There are no other adjustments made on this side. The left side controls only apply to the voltage setting in PowerSet mode. The Polarity (1a) will change based off of the process selected. In general, all MIG will use electrode positive (+). This includes most Gas-Shielded Flux - cored wires. Self-Shielded Flux-cored wires are typically electrode negative (-). The default graphic representation ( ) indicates the adjustment range of the voltage. The centered starred adjustment indicates the recommended setting but anywhere within the green range of adjustment should result in satisfactory performance. The highlighted bars will change from green to yellow to red, as the adjustments made to the recommended setting become less desirable and less likely to provide satisfactory results.

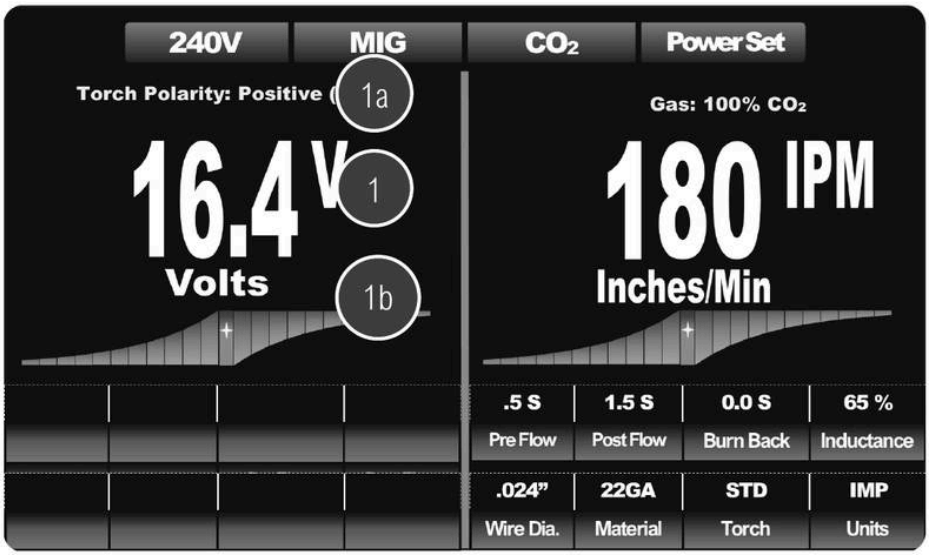

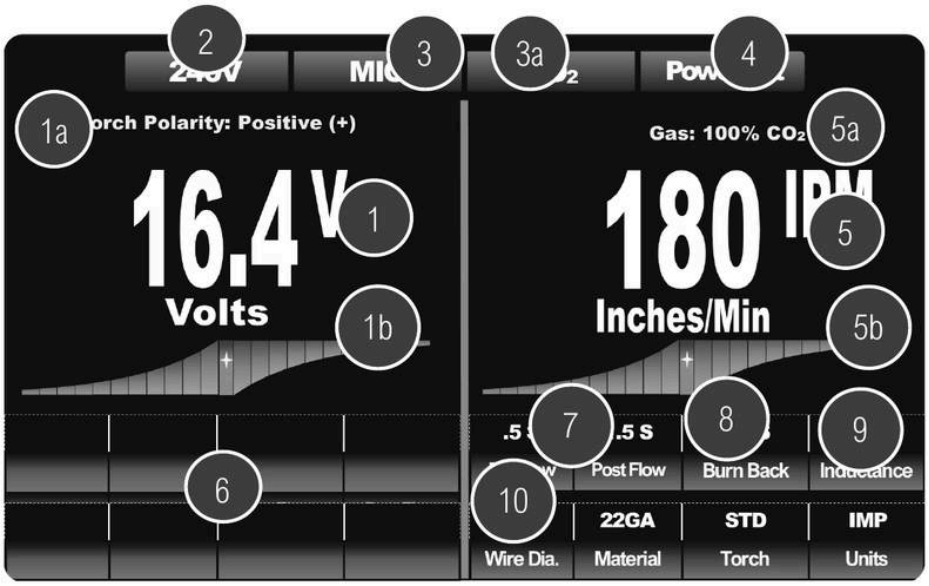

2. Voltage Input Confirmation. Voltage Input Confirmation. This confirms the voltage that is to be supplied to the machine. The correct Voltage is 240V. If 220, 230 or 208V is supplied, the Voltage will still read 240V.
3. Process and Gas Reminders. When viewed together, both 3 and 3a reminds the user which process and metal has been selected.
4. Manual/PowerSet Mode. This indicates in which mode the machine is operating. The PowerSet mode which is a synergic, more automated mode that eliminates some user required settings. In PowerSet mode, many functions may not be available for adjustment and will be preset or optimized by the programming based off of user inputs.
5. Main Right Display, Default Wire Feed Speed Display. Adjust the wire feed speed (WFS) with right adjustment knob. This display can indicate the wire feed speed in either Inches Per Minute (IPM), Meters Per Minute) M/Min or Amps. This is the default setting of the right side. Other parameters and functions will be represented in the display when in adjustment mode. When the Wire Feed Speed or other parameter is selected for adjustment the display will turn red in color. After 5 seconds of no input or adjustment of any parameter or function, the selected setting will default back to the Wire Speed setting and return to white. *While actively welding, the display function will change to read actual measured amperage output.* 5a indicates the gas selection. A selected MIG process will always require either C25 (75/25 Ar/CO_2 for Steel), C100 (100% CO_2 for Steel), Mix Gas (98/2 Ar/CO_2 for Stainless/Inox), Ar Gas (100% Argon for Aluminum), or No Gas (For Flux-Cored on Steel) in standard wire feeding modes.
6. Blank Area. Due to the PowerSet mode being active, this side will be gray and blank. No information should be displayed on this side.
7. Pre-Flow/Post Flow Timers. Pre and Post Flow provide adjustable shielding gas flow time before and after the weld. This is important to reducing contamination in the weld. The arc start and wire feed will be delayed slightly by the amount of pre-flow time used but helps provide a gas envelope around the weld. Post flow helps cool the torch and provides shielding around the weld after the arc is terminated. This helps prevent oxidation of the weld. NOTICE: In gasless Flux-Cored mode, Pre and Post Flow will be unavailable for adjustment and the space will be blank. Typically a setting of about 0.5 seconds for Pre-flow and 3-5 seconds for Post Flow are used.
8. Burn-back. This is the amount of time the arc stays on after the wire stops feeding. It is used to help prevent the wire from sticking in the weld and to reduce the need for constant trimming of the wire before restarting. Use a setting of .02 to .2 seconds to begin with for most applications. Smaller diameter wires need less burn-back time.
9. Inductance. IMPORTANT NOTICE FOR EXISTING EVERLAST MIG OWNERS AND USERS: Inductance improves the wet-in of the weld. A high setting will result in a very poor arc, with a high pitch. The result will be a raised

ridge in the middle and poor wet-in. Excess spatter may be observed. The result of too low of a setting will result in a very fluid, flat puddle. The pitch will be raspy and rough sounding. Starts will not be as smooth. Generally, a setting of 65% to 75% is a good starting point on Steel with C25. With Steel and C100, 80 to 90% is a good starting point. Generally, pure CO2 is not very smooth on many welders, but with inductance control, high quality welds can be achieved. Stainless requires the highest inductance with 90% or more. Aluminum can range depending upon the wire from 40 to 60% or so. Flux-Cored behaves a little differently with a 35 to 60% starting point. Of course, different weld positions, joint designs and thicknesses of metal can affect the inductance requirement slightly. The range of inductance ( ) is limited to help users maintain workable ranges that eliminate most spatter and provide the best wet in properties. In PowerSet mode Inductance has a default setting based on the wire type selected. Although the inductance has a targeted “center”, this is not meant to be a “50%” setting. It is centered around what is felt to offer the best overall performance for each wire type selected. Adjusting to one extreme or the other in PowerSet mode will usually provide satisfactory results as long as the user understands that this will change the way the welder welds overall and may not provide an arc feel that the user is accustomed too. In some circumstances, even though it may be a weldable setting, the level of spatter or smoothness of the arc will be affected at the extreme ends of adjustment.

Wire Diameter. Always double check that the proper wire diameter is DC

DC TIG:

The TIG PowerSet version is very basic with only inputs for diameter, material and units. This unit is designed for “DC TIG Rig” type of use, with a live lift arc and Panel control Amp settings. The torch gas line will be routed directly to the regulator and the gas is controlled manually through a gas valve mounted on the torch itself. This unit does not support foot pedal use. Amperage is preset on the panel only. NOTICE: The Tungsten will always remain live. Pay attention to where the torch is placed when welding is not taking place.

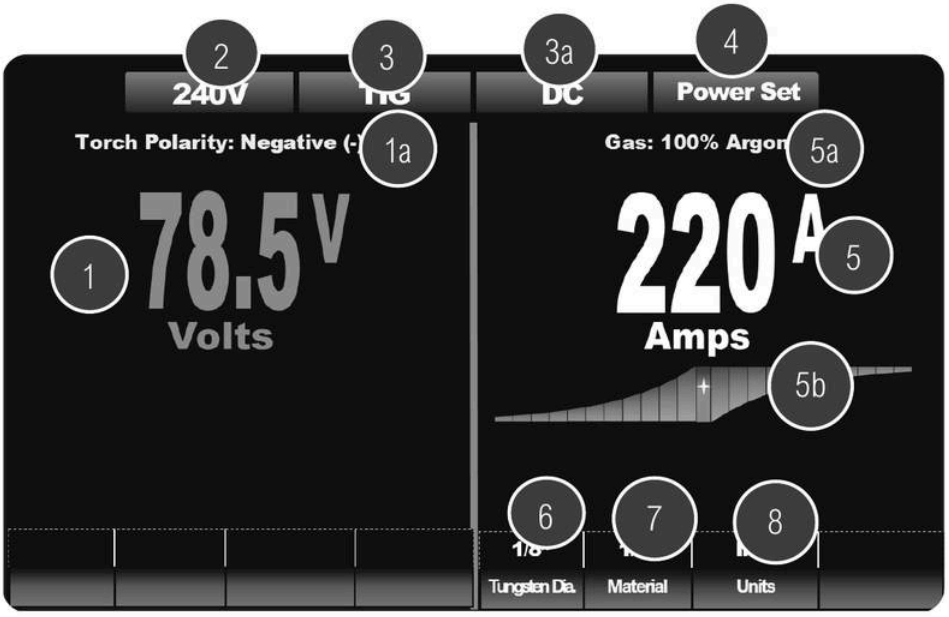

1. Voltage Display. The main Voltage display in TIG mode is a measured reading of actual volt output. Output voltage is not adjustable. The voltage will always be display in the color green to remind the user that the voltage is non-adjustable. The left control knob does not adjust voltage. Item 1a is the torch polarity reminder. For TIG it will always be electrode negative.
2. Voltage Input Confirmation. Voltage Input Confirmation. This confirms the correct voltage to be supplied to the machine. The correct Voltage is 240V. If 220, 230, or 208V is supplied at the outlet, the Voltage will still display 240V unless the voltage is too high or low.

3. Process Reminders. When viewed together, both 3 and 3a reminds the user which process has been selected. For TIG, DC will also be highlighted on this machine to remind the user that this unit is DC. (This TIG supplies DC output only for TIG. It is not suitable for welding Aluminum or Magnesium.)
4. Manual/PowerSet Mode. This indicates which mode the machine is operating in, whether in full manual mode or in PowerSet mode which is a synergic, more automated mode. In PowerSet mode, many functions may not be available for adjustment and will be preset.
5. Main Right Display, Default Amp Display/Reminder/Information Area. Adjust with right adjustment knob. By default this display area indicates the Amperage. In adjustment mode, the function or parameter selected will display and the display numbers/letters will turn red to indicate adjustment mode. After 5 seconds of no input or adjustment of any parameter or function, the selected setting will default back to the amperage reading and return to the default white color. *While actively welding, the display function will change to read actual measured amperage output.* The area in yellow is designed to inform or remind the user to check or change polarity and to confirm which shielding gas (5a) should be used. For TIG, this area will remain unchanged. Torch polarity in TIG mode will always be negative (-). The recommended shielding gas will always be 100% Argon. The graphic ( ), 5b, indicates the recommended setting and adjustment range. The colors of the graph will begin to change color the further away from the recommended setting the setting is adjusted. It will change from green to yellow to red, indicating that the adjustment may stray too far from the recommended setting and that performance may not be ideal. Even though the color code is designed to warn the user that the setting may not yield sound results, it is not an absolute guide and the user should rely on observed performance adjust accordingly.
6. Tungsten Diameter. The diameter of the Tungsten is important to determine the amount of Amps allowed and the material thickness that can be selected. The graphic ( ) indicates the relative diameter of the Tungsten and corresponds to a size listed in the window. NOTICE: Use 2% Lanthanated Tungsten for best performance.
7. Material Thickness. Material thickness must be set properly to achieve an accurate setting of Amps. If the exact thickness is not listed, use the next lower standard thickness and adjust Amps up as needed.
8. Units. This determines the units of measure used for PowerSet input. The units can be selected for either Imperial “IMP” or Metric “MET” units of measure.

DC Stick:

Stick PowerSet performance relies upon the proper selection of the rod type/class to work well. However not all possible welding rods are listed. If a rod is not listed, pick the selection with properties nearest the rod type listed. This may not work in every case. For any cellulose rod not listed, pick E6010. For E7014 try either E6013 or E7018 and use the one that provides best results. The simplest of PowerSet functions, the Stick mode uses a flat position for the ideal settings. The adjustment within the range provides enough leeway to accommodate other welding positions.

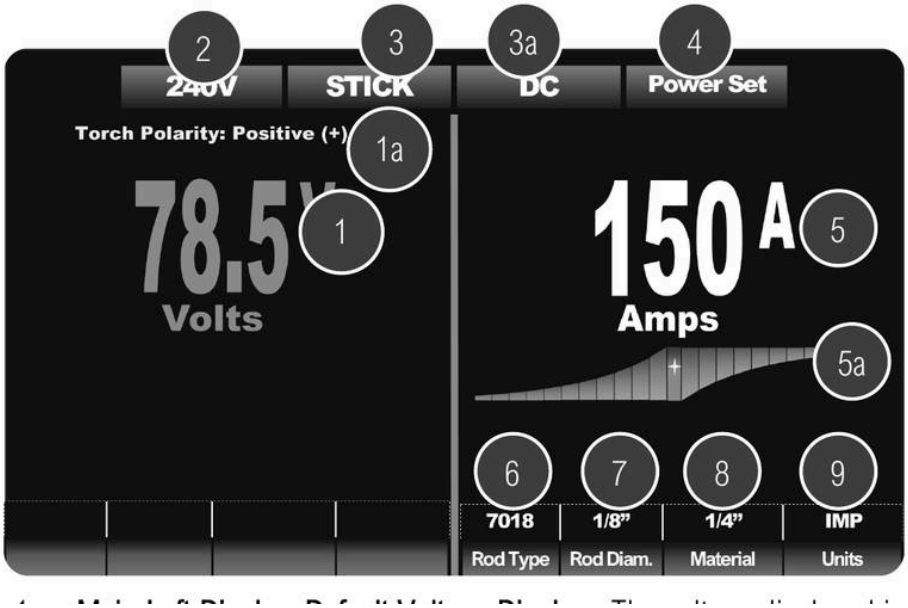

1. Main Left Display, Default Voltage Display. The voltage displayed in the Main display in Stick mode is a measured reading of output. It is not adjustable. The voltage will always be displayed in green color to remind the user that the voltage is non adjustable. The left control knob will not be able to adjust voltage. While adjusting other parameters, the voltage will change function and will display the selected parameter. It will also turn red to indicate it has entered the adjustment mode. 1a represents the recommended Stick polarity for most welding electrodes (welding rods) which is electrode positive (+). This is not an absolute recommendation as some welding rods can use electrode negative (-) as well. Be sure to consult the welding rod manufacturer information and view it as the ultimate authority on Stick welding polarity. Electrode Negative can provide some benefits for rods like E6011 and even E6010 in some limited applications.
2. Voltage Input Confirmation. Voltage Input Confirmation. This confirms the correct voltage to be supplied to the machine. The correct Voltage is 240V. If 220, 230 or 208V is supplied the Voltage will still read 240V.
3. Process Reminders. When viewed together, both 3 and 3a reminds the user which process has been selected. For Stick, DC will also be highlighted on this machine to remind the user that this unit is DC, and not AC mode. (This welder supplies DC output only for Stick)
4. Manual/PowerSet Mode. This indicates which mode the machine is operating in, whether in full manual mode or in PowerSet mode which is a synergic, more automated mode. In PowerSet mode, some functions may not be available for adjustment and will be preset for best general performance. If optimum performance is not achieved, discontinue use of PowerSet and use the full manual setting to achieve better results.
5. Rod Type. This feature helps improve overall rod performance and provides a base for the machine to fine tune parameters. If the correct rod type is not listed, select a rod type that offers properties or arc characteristics that most nearly matches the rod desired.
6. Rod Diameter. The selection of the rod diameter is important so that the correct settings can be achieved.
7. Material Thickness. Material thickness must be set properly to achieve an accurate setting of Amps. If the exact thickness is not listed, use the next lower standard thickness and adjust Amps up as needed.
8. Units. This determines the units of measure used for PowerSet input. The units can be selected for either Imperial “IMP” or Metric “MET” units of measure.

12 Run-In & Trigger Modes

Run-in feature and 2T/4T torch switch.

NOTICE

The following sections cover MIG, TIG, and Stick terms, definitions, and basic operation. Some of the terms overlap from process to process and serve essentially the same functions. Take note that some terms will repeat from process to process, but will be described in a way that is specific to the process being used. In some cases where function is identical or so similar to the same function found relating to another process it may not be repeated or redefined. For example, the 2T/4T torch switch function applies to both MIG and TIG, and it behaves similarly for each. However, there are slight differences to what it controls The general description under MIG and TIG will describe it slightly differently to accommodate the operational differences, but in the main drawing and discussion, the function will be more generic to accommodate both processes.

NOTICE

This unit features a slow run-in feature. This means the wire will feed slowly until the arc is started. It is used to improve arc initiation and reduce weld porosity which results in poor fusion during the arc starting process. Once the arc is sensed, the wire speed will ramp up and weld at the selected wire speed. If not desired, especially for rapid tacking or use with the Spot/Stitch function, the Run-in may be turned off on the panel face, but it may cause an undesirable stutter at arc start. For most applications, always make sure Run-in is turned on.

Using The Trigger/Torch Switch Remote Functions

Operating the 2T/4T Remote Function

The Remote Torch Control function works with both the MIG and Flux Cored processes. The Gun Trigger Function is designed to allow the user to program the welder so that the stages of the weld cycle can be controlled via operation of the torch switch. This should not be confused with a Remote Amp control like the Spool Gun Amp control wheel. The switch itself provides no adjustable control. It is only designed to cycle a stage or stages of the weld cycle. Both MIG processes behave similarly in 2T and 4T modes since there are very similar controls in both processes.

2T function controls all of the weld cycle with a simple press-and-hold and release action. This is the traditional “pull the trigger” mode that is familiar to most users, but it involves controlling more functions than a simple “on and off” of the weld arc. This is also called a 2 step function. The torch trigger moves in two directions, each change of direction signals the welder to advance to the next stage of the weld cycle.

4T function controls each stage of the weld cycle by multiple press and hold actions of the torch trigger. This is used to retain manual control over the slope stages and start and end portions of the weld cycle through each movement of the torch trigger. Press the trigger and hold to start the Pre flow cycle and start the weld. Once the arc has started, stabilized, and begins to wet in properly, release the trigger to upslope and weld at the normal set Amperages. Pull and hold the trigger to allow the down slope cycle to occur. Once the down slope cycle has completed and the weld crater is adequately filled, release the trigger to end the weld. The arc will terminate and the Post Flow cycle will begin. A common error is to simply click the torch trigger rather than hold the trigger during

the down slope. The only time the trigger should be clicked is in the middle of the down slope cycle to toggle the weld back to the welding cycle Amperage. If the cycle has fully reached the bottom of the down slope the cycle cannot be restarted and the arc will terminate when the trigger is released. This is useful for managing the weld heat once it begins to get too hot. This toggling feature can be repeated during the weld. It's not meant to be a adjustable amp substitute, but it is useful to help manage heat temporarily when a weld gets too hot to manage.

While using the MIG Spool Gun or Push-Pull Gun, the selection of the correct torch type automatically gives you control over the Amperage on the gun. The Amperage control knob on the Spool and Push-Pull guns adjusts Amperage from minimum possible setting up to the maximum limit set by the main Amp control knob on the panel. While the Spool and Push-Pull guns Amps or WFS, it still cycles all of the 2T and 4T programming through the separate trigger pulls. The Wire Speed Feed Rate is adjusted on the gun, while the maximum feed rate is set on the screen. While it is technically possible to adjust the Wire Feed Speed Rate up or down while welding, similar to a TIG foot pedal action, it is not recommended. The location of the knob make this impractical and increases wear on the potentiometer connected to the control on the gun. *To operate with a Spool Gun or Push-Pull Gun, preset the Maximum Wire-Feed Speed on the Panel, then set the Spool Gun/Push-Pull Gun Wire-Feed Speed and it will be reflected on the panel. If further adjustment is needed, make adjustment on the gun first. If the output is not enough, then add additional IPM (Meters/ Min) on the panel and readjust the gun higher.*

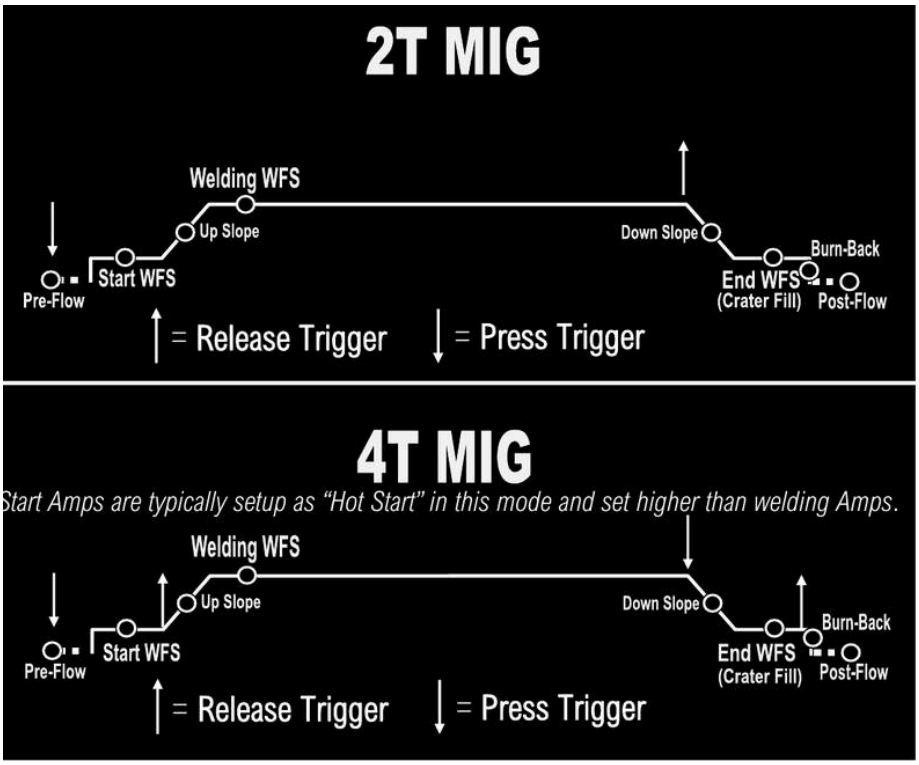

NOTE: This unit does not support any form of foot pedal or torch switch control for TIG. The Amperage is preset on the panel and the user must weld at that preset Amperage on the panel without any real-time variation. Lift-TIG arc starting requires practice and technique. However, this type of arc-start is used everyday in the field on steel and stainless. It is a very common way of welding.

13 Parameters, Functions & Welding Terms

Explanation of parameters, functions and terms.

Explanation of Parameters, Functions and Welding Terms

EXPLANATION OF GENERAL WELDER FUNCTIONS.

Volt and Amp Settings (Short Circuit MIG).

When welding, the two main functions that require adjustment are Voltage and Wire feed speed. The function of voltage in MIG welding is to control the overall width and to a great extent, the height of the weld bead. In other words, voltage controls the bead profile. It controls wet-in at the toes of the weld, and arc length. Short arc lengths provide wider welds. The wire feed speed directly controls the amps, and in turn amps control penetration. When setting the welder up you will notice that the wire speed is displayed in Inches Per Minute. The relationship between wire diameter, wire speed and amps is easily figured with the following approximate industry conversions (for steel):

.023″: 3.5 x Amps = Inches per minute (IPM)

.025″: 3.1 x Amps = Inches per minute (IPM)

.030″: 2 x Amps = Inches per minute (IPM)

.035″: 1.6 x Amps = Inches per minute (IPM)

.045″: 1 x Amps = Inches per Minute (IPM)

To convert wire speed (IPM) into approximate Amps, use the following conversion formula (for steel):

.023″: IPM ÷ 3.5 = Amps

.025″: IPM ÷ 3.1 = Amps

.030″: IPM ÷ 2 = Amps

.035″: IPM ÷ 1.6 = Amps

.045″: IPM ÷ 1 = Amps

Keep in mind these are approximate conversions and do fall off in accuracy as amps are increased into the upper current limits for the given wire diameter.

Even though you will find general recommendations about setting the Amps, Volts and even shielding gas through a variety of free downloadable apps and online calculators, every filler metal manufacturer has its own specific parameters for Volt and Amp settings for each wire diameter and class of wire. The ranges of volt and amp parameters generally varies somewhat from brand to brand, so be sure to read the packaging and/or manufacturer literature to determine what range of settings are recommended. The wire diameter also limits the practical maximum thickness of what can be reasonably welded. The issue with following charts, graphs and calculator recommendations is that most people find them either too hot or too cold. For some people, it may not be close to the setting they are used to. However, nothing can substitute for watching and listening to the arc. If the arc is correct, a steady sound, similar to the sound of bacon should be heard. The actual frying sound can vary somewhat and may have somewhat of a higher pitch whine to it. If these sounds are present, look at the arc to see if it is steady, and producing low amounts of spatter.

If large amounts of spatter are present, the puddle seems fluid (appears wet) and the wire speed is within the targeted range, decrease volts a little at a time to reduce the spatter. If this does not correct the problem, change

the torch angle and torch height. Hold the torch more vertical, with less than a 15 degree deviation from vertical and make sure wire stick-out is 3/8″ or more. If this still does not help, reduce the wire speed. Some slight spatter is normal, though it should be minimal overall.

The wire can also pop and spatter if the voltage is too low for the wire speed and/or wire diameter. This is mostly observed as flying bits of red hot but un-melted wire, along with popping as the wire inconsistently stubs into the puddle. This is followed by the wire pushing back against your hand pressure while the wire visibly turns white/red hot before burning off. Too low of voltage will also produce a high piled bead with the toes (edges) of the weld not properly wetting in resulting in poor fusion.

Even though the PowerSet feature has been provided, sometimes additional adjustment may need to be made to the settings based off of welding position or joint type. With this unit, we've tried to provide plenty of adjustment range in the PowerSet function. Normally, this will still allow a functional setting. However, when the welding wire is pushed to its maximum limits with Volts and Wire Speed limit, welding may not be smooth and spatter, undercut, and burn-back (when the wire melts back to the tip) may occur.

Starting the Arc and Welding In the Short Circuit MIG Process.

Starting the arc is a relatively simple process. Before beginning, the wire should initially be trimmed to between 1/4 to 3/8″. Once the wire is trimmed, the gun should be firmly grasped to prevent a phenomenon often referred to as "machine gunning". A light grasp, especially at start, can cause the arc to stutter as the wire pushes back on the gun, lengthening the wire stick-out and creating an irregular start and a porous weld.

The end of the wire should be positioned just barely above the metal when the trigger is pulled for the cleanest start. This will position the end of the contact tip about 1/2″ to 5/8″ above the weld. The gun should be in the vertical position, with no more than 5-10 degrees lean in either direction.

Holding the wire too far off from the metal will result in rough starting and too long of wire stick out.

Once the arc has been established, the gun can then either be pushed or pulled in the direction of the weld. With either method, the gun nozzle should be positioned directly over the weld without angling the wire to one side or the other of the weld as already mentioned. The gun should have no more than 15 degrees lean pointed into (push) or pointed away from (pull) the direction of travel. In most cases a push motion is desired. However, a lot of texts offer conflicting information on whether to push or to pull the gun. In reality, both are correct if used correctly and with each having particular strength and weakness. Either one done with too much gun angle will result in undesirable results. Most people who are well versed in MIG quickly develop a sense of when to push and when to pull the gun. Even for novices, a sense of when to push and pull the gun comes quickly with a little practice. Pushing can result in shallower penetration but the molten puddle is easier to see and the arc sits easily on the leading edge. It will usually leave a aesthetically pleasing bead. However, be careful to prevent the gun from leaning toward or away from the direction of travel too much as spatter will increase and shielding gas flow may become turbulent, creating porosity in the weld. Pulling will result in deeper penetration, but can result in a narrow bead without much side fusion. It also can leave an undesirable humped appearance if not done correctly or if travel is too slow. Whenever MIG welding with Aluminum, whether with the standard MIG gun or the Spool gun ALWAYS push the gun. If using Flux Cored wire, a dragging motion is almost always recommended.

For TIG, a push angle of the torch is always recommended. This keeps the gas pushing in front of the weld, and keeps shielding built up in front of the weld. The filler rod should be introduced in front of the torch travel.

For Stick, a drag angle should be used unless welding vertically. The angle may change to a more perpendicular or push angle to keep the puddle in place.

Weaving in Short Circuit MIG Welding. Weaving (oscillating the torch or electrode from side to side in one pattern or the other), particularly in MIG, is a topic of controversy as much as whether to push or pull the MIG gun. Stringer beads are often best for novice welders. Stringers are simply straight beads that move forward with little or no side to side travel or oscillation. These will offer the soundest welds for a beginner in MIG or Stick. Stringer welds leave

little or no room for contaminates to enter the weld and are the fastest to produce without creating an opportunity for cold lap. Moving too quickly however with a stringer can create undercut which will weaken the weld. The best policy is to move a slow steady speed, making sure the sides of the weld are filled. If undercut is present, it is either from too much voltage or moving before the wire has time to fill the area the arc has melted.

Think of weaving as a method of “sewing” the metal together. If weaving is of interest to you, start with the basic weave pattern. Simple weaves using one variation or the other of a cursive “e” motion are best to begin with. Other weave patterns can be used of course. C’s, V’S, U’s , Triangles and many more weave patterns can be used depending upon the application. Vertical stick will use a more exaggerated side to side Z pattern weave when traveling up hill on thicker plate metals. Whether it is MIG, TIG or Stick, weave patterns are employed for a number of reasons. Weaves are often considered to have a more pleasing appearance and can help bridge gaps where fit up is a problem. A weave is also frequently used to manage heat build up. For example: when welding vertically weaves are almost always used to prevent the molten metal from sagging due to the force of gravity. The major drawback of weaving is that it introduces a greater possibility of getting inclusions and other forms of contamination in the weld. Properly done weaving is a valuable tool, but it must be practiced before employing it in any structural or critical application.

Metal Cleaning.

MIG and TIG welding requires a well prepped surface to obtain a sound weld. The removal of paint, rust mill scale, or other contaminate such as grease should be done before welding. Stick welding is more forgiving of rust and mill scale, but when MIG welding, contaminates will result in porosity and inclusions in the weld, weakening it. In TIG welding it can be disastrous. TIG requires the most cleaning effort. A grinder will usually prep the metal sufficiently to remove oxidation and paint. However, to remove grease a degreaser such as acetone should be used. Do not use any degreaser such a brake cleaner with chlorinated solvents or death or serious injury may occur!

MIG and TIG filler wires such as ER70S-6 or ER70S-2 include a sufficient level of deoxidizers such as silicone and copper that are formulated to allow it to handle minor to moderate amounts of rust and mill scale. These deoxidizers will float out most moderate amounts of contaminates out of the weld and will appear in the usual form of glassy like deposits on top of the cooled metal. They are easily brushed off before starting the next pass. They should not be welded over. Any pinholes that appear are a result of trapped gas in the weld and should be ground out before the next pass. It should be noted that some MIG wires such as ER70S-3 have low levels of deoxidizers and must be thoroughly cleaned and ground before welding. MIG and TIG ER70S-2 and ER70S6 are the same except that TIG wire is cut to lengths and MIG wire is continuous. When welding fine gauge materials in TIG, you can substitute sections of thinner MIG wire.

Multiple Pass Welds.

One of the common misunderstandings that people have when beginning to weld is that if the welder has the power, then a single heavy pass should be used to weld it up. This is wrong. This technique will induce cold-lap and inclusions to the weld. Single pass welds should not exceed 1/4” even with the heaviest wire the welder is capable of handling. A thick pass may also begin to cool before contaminates and gas pockets have the time to float out to the surface. It’s far better to make multiple smaller passes to complete a plate weld for a higher quality result. For best results, this requires that most joints 1/4” and over be prepared with a grinder to accept multiple weld passes. The weldment edges should be ground to form a V, U or J shaped groove to create a recess where the welds can be welded one on top of another. For MIG/Flux-Cored welding with .035” wire and under, create a bead no thicker than 3/16” in a single pass, no more than 1/8” with .030” wire, and with .025” wire and smaller no more than 3/32 for best results. This will help maintain proper fluidity of the weld and prevent gas from being trapped in the weld and give time for any minor contaminates to float out of the weld. It will also help to maintain reasonable forward travel speeds. Too slow of travel speeds will create excess build up and can tend to create cold lap at the weld toes resulting in poor tie in. One issue created with a weaving technique even if the metal deposited is the correct thickness is that it can slow the forward progress down. If weaving is too wide, one side of the puddle will cool and oxidize before the torch is brought back across to that side. This is a point where porosity can be introduced.

Using PowerSet

At the beginning, especially for new users unfamiliar with MIG and MIG settings it's recommended that the PowerSet mode be used for the easiest setup experience. While it does not offer the level of control that full manual MIG mode offers, it does provide a lower level of skill and knowledge to setup and use proficiently. Professionals will appreciate the straight forward control found in the PowerSet mode. PowerSet helps eliminate the need to refer to complicated charts and setup graphs. It provides you the exact settings that would be provided on a chart or graph but in a more digested form. Even though the range of adjustment is limited, it provides enough fine-tune adjustment range to satisfy most users welding in flat position. The PowerSet mode does have its limitations. Keep the following information in mind about PowerSet:

1. Powerset is primarily designed for flat (downhand) position welding. This is the type of welding usually performed at a bench or while standing/ sitting over the part being welded. Settings provided may not work well for vertical or overhead welds. Ordinarily, the adjustment range does allow for enough adjustment range for the user to find the best setting for the application, but not in all cases. If a workable setting is not found before the adjustment reaches the limit, then use the manual mode and copy the last settings available from PowerSet mode and make further adjustments from that point.
2. Needing to make adjustments to the PowerSet settings does not necessarily mean that the settings are "off". The range of adjustment is there to provide enough adjustment range to fine tune the unit to achieve the best performance. Ultimately, there is a limit, but this is there to prevent really poor combinations of wire speed and voltage.
3. PowerSet offers preset values for welding Voltage and Wire Feed Speed. It also eliminates many other settings and presets them for best performance. However, PowerSet still does require manual entry of some settings. As a rule, if there is a setting on the unit, that means it should be adjusted or some attention paid to it. Many parameters are preset, but to give the user the best possible management of the weld, other settings still require monitoring or input by the user.
4. The PowerSet settings are provided based off of general engineer consensus and in-field product testing, but it has been observed that no one particular setting will please everyone. It cannot account for differing welding styles and different applications or job site requirements. PowerSet should not be used as an "ultimate authority".
5. Ultimately, if you feel the settings are unworkable, then the unit should be operated manual mode. .
6. Always double check that the inputs of wire type, diameter, shielding gas, and metal thickness, where applicable, are accurate or poor performance or malfunction of the welder may occur.

To make the welder work for you regardless of whether you are using in manual or PowerSet modes, learn what each setting controls and how it interacts with the weld cycle and how it affects quality of results. Ignoring proper settings for parameters like Inductance will have a detrimental effect on welding performance. Other settings like Pre/Post flow are important too, but these settings are set based off of user requirements. In some cases like rapid tacking, flow times can be set to 0. But most applications some pre and post flow is needed.

Arc Length and Contact Tip to Work Distance in Welding.

Keeping a tight, short arc for TIG and Stick is important to prevent inclusions in the weld, especially while weaving. It helps control the puddle. Keep arc length ≤ 1/8" for TIG. For Stick dragging the rod is the best policy unless using a cellulose rod, then about 1/8" with a slight whipping/ stepping motion helps the puddle to penetrate.

When welding in MIG mode, too tight of contact tip to work distance (<3/8" for Short Circuit and 3/4" to 1" for Spray Arc MIG) will produce excess spatter as the wire shorts into the puddle. This is also dependent up the MIG gun size choice. This creates a violent reaction in the puddle and will send globules of metal flying out of the weld. If excess spatter is noticed while MIG welding increase the arc length and reduce wire speed. If the arc is too long the arc will tend to wander at the end of the wire.

What Are the Different Kinds of Welds?

Besides a butt joint (Flat edge to flat edge) and lap joint (overlapping edges) which are often used for thinner metal gauges, consider using one of these groove joints for best welding results. When grinding or cutting the bevels, especially with a single V-groove, it may be beneficial to leave a small land with a gap between the joint to achieve full penetration. In this case a temporary backer plate can be used to support the bottom of the weld to create the root pass. The root weld will weld the backer to the main plate. This backer can later be ground or cut off. However, in many cases a plain open root can be used as a backer plate adds to the time and labor involved. A knife edge is also acceptable so long as the joint is fully penetrated when the weld is completed. Open root gaps without a backer can range from 1/16″ to 1/8″ depending upon wire diameter and application.

When Do I Use Multi-Pass Welds?

When welding material 1/4″ and over be careful about trying to put too much metal down in a single pass. Use multiple passes to complete the weld along with any necessary joint preparation especially with wires of smaller diameter. As metal thickness goes up so does the number of required passes. Depending upon the wire diameter and power settings used, a 1/4″ joint may only require 1 or 2 passes, but a 3/8″ joint in plate metal or pipe will require not only beveling but 4 to 6 overlapping weld passes including a cap and root pass. See example in next column.

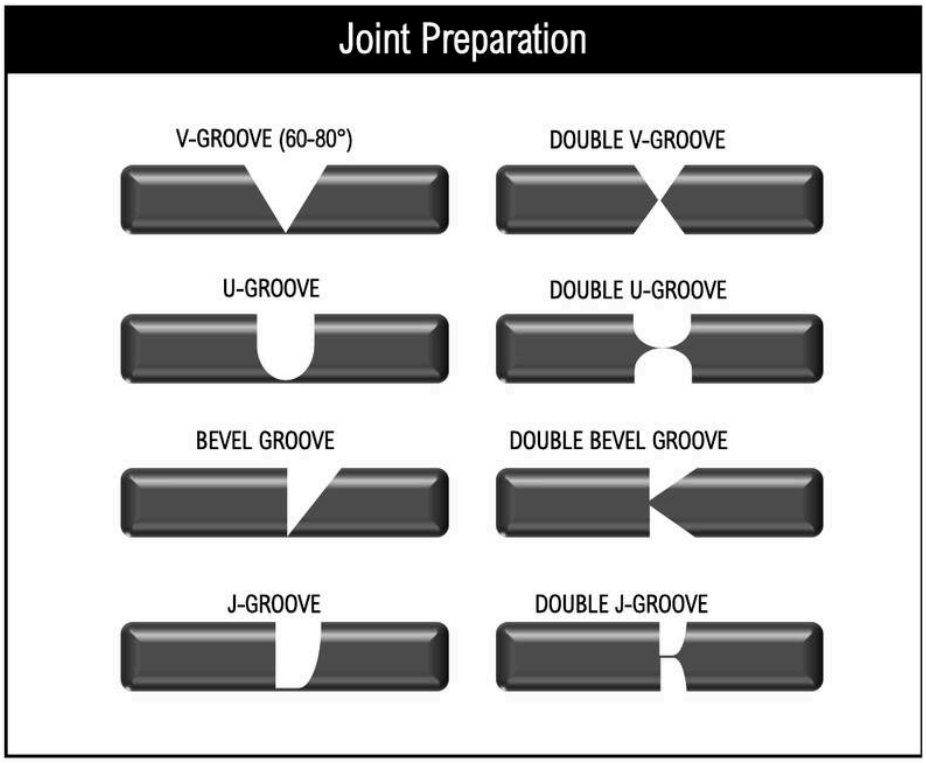

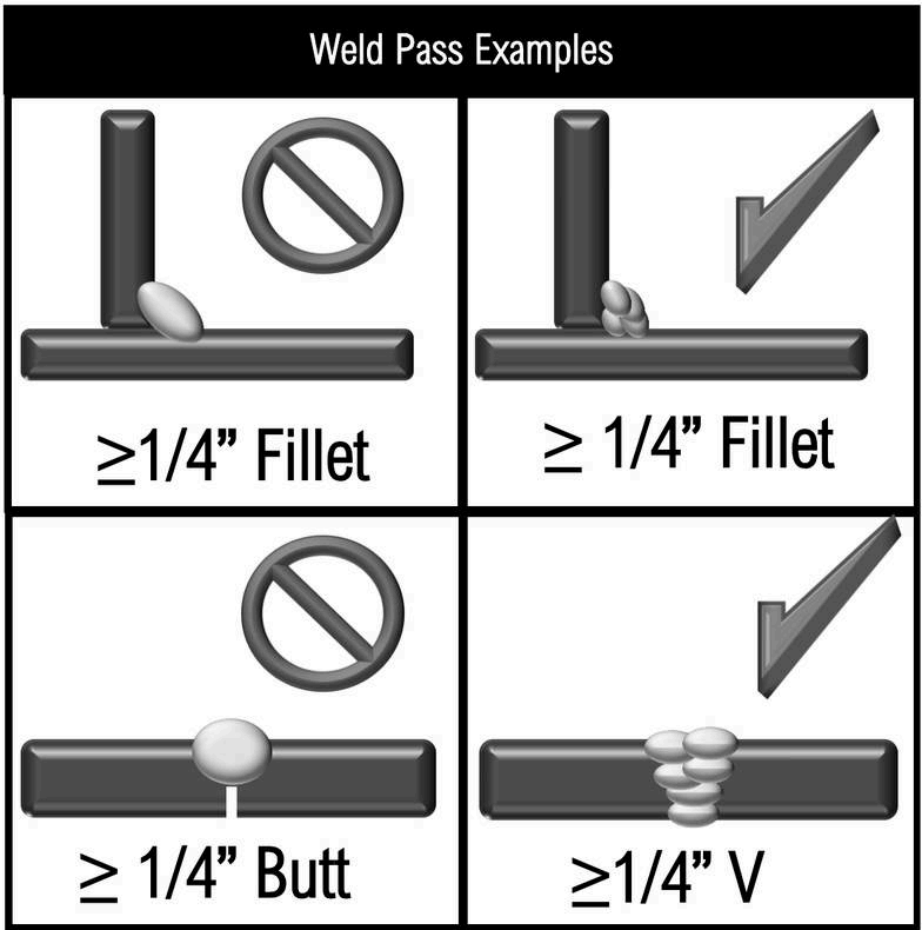

Drag or Push MIG?

MIG Welding is fairly simple. Just keep travel angle and direction in mind when welding. A push angle is often recommended for short circuit MIG and Spray Arc Welding for the least amount of spatter and bead profile. A push angle is always recommended for welding Aluminum. *The old welder's saying "If it has slag, you drag." applies to Flux-Cored Wire welding.*

	**Problem Technique:** The Gun is not being held vertical from side to side. Wire is not being directed to the center of the puddle. This concentrates heat on one side of the joint and results in poor fusion on the neglected side. It also can create more buildup on one side of the joint than the other. **Correction:** Hold the gun so that the angle of the neck stands perpendicular from side to side.	
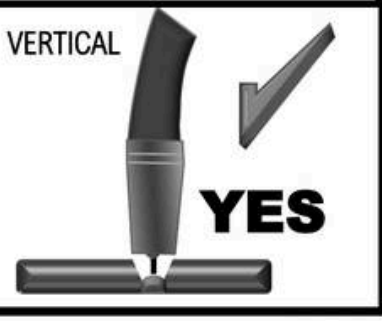	**Correct Technique:** The gun is held in a near vertical position. A variance of 5 degrees or less is acceptable from side to side. The purpose is to prevent the arc from being concentrated on one side of the weld joint or the other. This balances the heat on both sides of the joint and keeps the bead centered. Don't confuse this with push or pull angle in the travel direction.	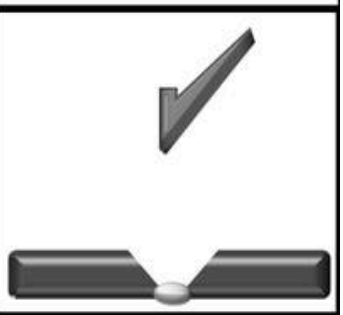
	**Correct Technique:** The gun is angled toward the back of the weld when traveling forward. This angle should not exceed 15 degrees. This provides a narrower but more deeply penetrating weld. Use this method when Flux Core wire is being used. Use this method where the unit may be reaching its maximum welding capacity. Not for use with Aluminum wire.	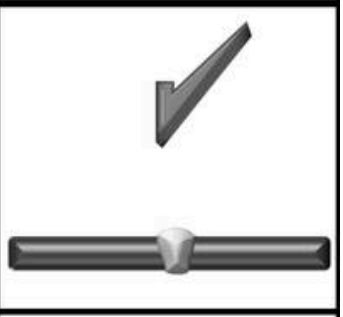
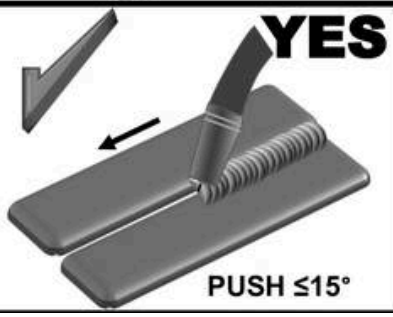	**Correct Technique:** The gun can be angled toward the front of the weld when traveling forward. This angle should not exceed 15 degrees. This provides a wider and generally more pleasing weld. However it is shallower penetrating. This method typically allows a much better view of the arc. Use for most types of welding unless deeper penetration must be achieved.	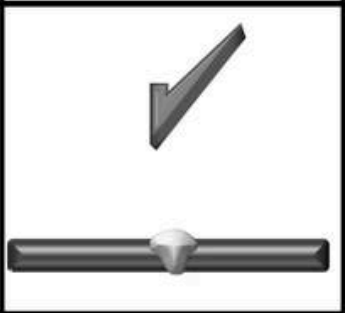

The TIG Arc Start is a Live lift type.

Live Lift Start requires direct, purposeful contact with the surface of the metal to create continuity followed by a quick lift-off of the Tungsten to strike the arc. To understand how this works, when the Tungsten is touched to the metal, there is a small current supplied to the tip. At the time the Tungsten is lifted up, the welder senses the break of continuity. Then, the inverter sends full output to the Tungsten tip as the arc is established through the small spark created by breaking continuity. This form of Arc Starting is used when people need to start an arc without the use of an HF energy being present which can interfere with sensitive electronics nearby. It works well with steel, stainless and similar metals.

How Do I Perform a Live TIG RIG Lift Start?

1. Manually turn on the gas valve on the torch. (Not Pictured)
2. Rest the edge of the cup on the work piece so that the tungsten is slightly off the work. Press the trigger or foot pedal. Quickly rotate the tungsten to the work using the cup edge as a pivot.
3. A small spark may be noticed as it touches. Once the Tungsten touches, quickly and seamlessly rotate the cup back to draw an arc.
4. Raise the cup to establish the arc to 1/8" or less in height.
5. Allow the puddle to form and move the torch forward maintaining 1/8 or less height.

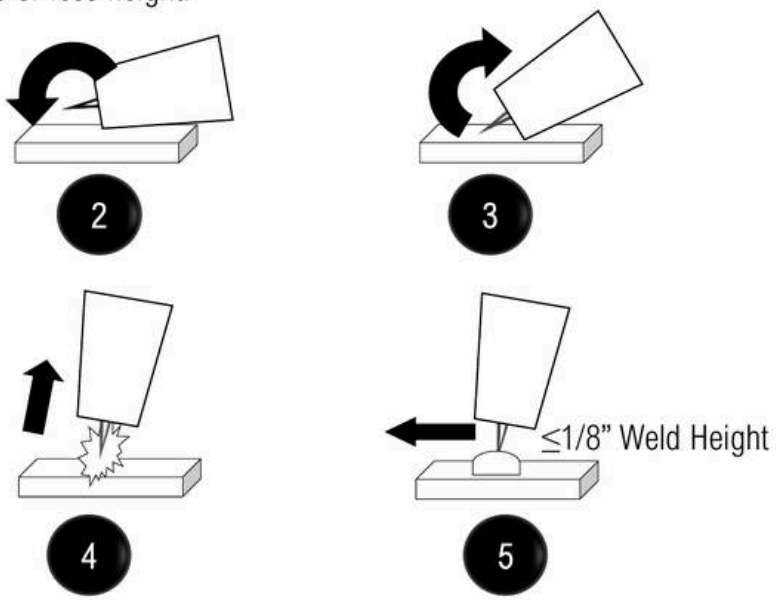

How Do I Start an Arc With Stick?

There are two basic types of arc starting methods used. The tapping motion allows pin point placement of the arc, while the scratch start method is similar to a match strike and is easier for beginners.

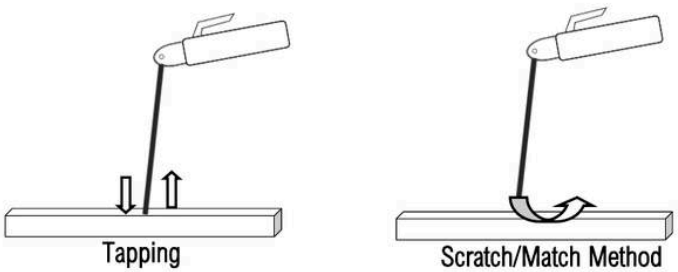

Starting The Stick Arc.

Stick is a fairly simple welding process. Arc starting can be done with a scratch or tapping method. The electrode is always live, but the VRD function can reduce the risk of electrocution, and may be required in some situations for safety. But it will be more difficult to start the arc. A quick double tap can help improve arc starting with the VRD engaged.

Amps (TIG/Stick). Shortened from “Amperes.” Amps is a measurable value of Current. Amperage is used to refer to the magnitude of Current. *Amps will also be displayed while actively welding in MIG mode as well instead of wire feed speed.*

Anti-Stick (Stick). This is a special function that helps make removing stuck rods easier. When the mode is activated, the unit senses the low voltage ouput of the stuck rod and drops current to prevent the rod from sticking fast in the weld puddle, overheating and flaming out. The goals is to make releasing and removing the stuck rod easier so that it can be salvaged.

Arc Force (Stick) Arc force is used to offset the loss of overall wattage (V x A = W) as the arc length is shortened and voltage begins to drop while stick welding with short arc conditions. It offsets the drop in voltage by injecting extra amps into the weld when voltage drops below the 20V threshold. This enables the amperage to react aggressively or mildly, depending upon settings. It also helps to prevent arc outages, and allows the user to hold a tight arc and maintain better control. This function is also referred to as “Dig” and “Inductance” in the industry. Arc force is set as a percent of Amps over the set welding Amps. As the welder nears the top end of the Amp rating for stick welding, Arc Force action will be reduced due to less compensating Amperage being available for use. This will happen regardless of Arc Force Setting. Typically Arc force settings with rods such as E7018 and E6013 should be set to around 20 to 35%. Arc force for Cellulose based Flux rods such as E6010 and E6011 is 60% or greater.

Arc Length. Arc length is the distance between the end of the electrode (TIG/Stick), or filler wire (MIG) and the puddle.

Arc Trim. In Synergic MIG mode, the arc trim is used to control the arc length of the MIG weld. The Arc Trim actually controls the average pulse voltage and is represented by a relative scale (-5 to +5). The more negative the Arc Trim is adjusted the shorter the arc length will be. The more positive the Arc Trim is adjusted, the longer the arc length will be. Too much arc trim will result in burning back to the tip. Too little arc length will result in the wire stubbing into the puddle and large amounts of spatter will occur and in some cases bird’s nesting may occur. When Arc Trim is used, there is no direct Voltage setting due to the rapid pulsing up and down of the voltage.

Burn-Back. The Burn-back function is a MIG function used to control the arc at the end of the weld. Burn-back control keeps the arc on for brief period of time after the wire stops feeding. This helps to prevent wire sticking in the puddle as the user hovers briefly over the weld after the arc is terminated. If extra over-run of the wire is experienced or the wire welds itself to the puddle after the arc is terminated, increase burn-back time. Usually .02 to .2 seconds is sufficient. If too much time is used, the wire will burn-back to the tip after the weld is terminated (Burn-back control does not prevent wire burn-back to the tip while actively welding.)

Direct Current or DC (MIG/TIG/Stick). Used to describe one way flow of electrons. Used in TIG to weld Steel, Stainless Steel (Inox), Chrome Moly, Titanium, and more. Not used with Aluminum and Magnesium. For MIG this is the standard method of MIG welding with all metals. This is the preferred method of stick welding. For most MIG and Stick applications, DC polarity of the torch will be positive (DCEP +). For Flux-Cored and TIG use the DC polarity will be negative (DCEN-). The welder will remind you of this polarity.

Down Slope (MIG). Downslope is the duration of time that it takes for the programming to transition the Amperage from the Welding Amps to the End Amp setting . Adjustment in TIG Pedal mode will be blocked. This timer controls the decrease of the amperage and provides a window to fill the crater as the puddle begins to cool before the arc terminates. Used with all remote functions except the foot pedal in manual mode.

End Wire Feed Speed (MIG). This is the destination current value (or MIG end wire feed speed) set for the end of the weld cycle. When used with the torch switch, this is the final current (end wfs) set used to taper off and fill the crater at the end of the weld. For TIG foot pedal use, this value should be kept at a minimum for proper tail off. However, the Tungsten size will ultimately dictate the exact minimum amperage that a stable tail off of amperage can be performed. For MIG, this helps slow the wire and makes a more gentle termination and better crater fill.

Hot Start Amps (Stick). This setting controls the intensity of the arc start by boosting the initial amps at the start of the weld cycle. It is used to improve arc starting and reduce the time needed to establish a puddle and helps to prevent porosity at the beginning of the weld. The Hot Amps are set as a percent of Amperage over the welding Amps. Maximum Hot Start action may be limited by available Amperage for stick welding. As the current is raised near the top Amperage of the welder, Hot Start Action will be less forceful due to less Amperage being available, regardless of machine setting. Typical settings can be between 30 and 70%, depending on electrode type. Iron Powder and Low Hydrogen rods will require less Hot Start action from 30 to 50%. Cellulosic rods may require 60 to 75%.

Hot Start Time (Stick). This is the time the Hot Start Stays engaged. The Hot Start Time will be increased on thicker plates, but in general, .5 to .7 seconds works well for plate thicknesses up to 3/8".

Inductance (MIG). Although the action is different, this is similar to arc force in stick that helps change the puddle characteristics and defines the feel of the arc, whether stiff, or soft and fluid. It is a relative amount and cannot be turned off completely. The user may also notice that the arc width is also controlled to a small extent. The Inductance setting is as important as setting Volts or Amps and should not be ignored.

Lift Start (TIG). Lift start requires touchdown and lifting up of the Tungsten to start the Arc. *Due to the TIG RIG Design, the tungsten is always electrically live until the arc is started and the gas control valve must be manually operated to provide and stop gas flow.* When the tungsten is touched to the metal, continuity is sensed and the welder sends welding power as soon as the continuity is broken.

Open Circuit Voltage (OCV). OCV is the voltage that is present when the arc is not struck. OCV is particularly important to stick arc starting. OCV is reflected in the left main display area as the default when not welding.

Post Flow (MIG). Post Flow is the amount of time (in seconds) that the shielding gas flows after the arc is terminated. This is an important function. The flow of shielding gas after welding is stopped helps to 1) Cool the torch and/or tungsten and prevents oxidation of the tungsten/filler wire as it cools. 2) Provide cooling and shielding while the weld puddle solidifies and cools. This helps to prevent the weld from forming porosity and prevents oxidation of the weld as it cools. Post Flow should be increased at the Amperage increases. For TIG Post Flow is manually controlled with the gas valve. At a minimum, 2 to 3 seconds should always be used. For MIG use, use 2 to 3 seconds for every 50-70 Amps. To properly use Post Flow, the torch should be held in place over the weld after termination until the gas shuts off.

Pre-Flow (MIG). Pre Flow is the amount of time (in seconds) that the shielding gas flows before the weld starts. It is very important that the Pre Flow be set for at least a short flow before any weld. The Pre-Flow not only purges the torch of any contamination, but it also establishes a protective envelope of shielding gas around the weld before the arc initializes. In TIG mode this protects the tungsten, and helps to establish an arc more quickly by surrounding the tungsten and work with more easily ionized gas so that arc starts are more efficient. For MIG, it provides a stable gas pocket to strike the arc and helps prevent inclusions at the beginning of the weld. It also allows time for the gas flow to stabilize before the arc is struck. When initializing the Pre Flow a "rush" of gas can often be heard just ahead of the arc strike. Then the gas flow will quieten down as the weld begins. This is normal. This rush of gas is caused by several things, but it is in part due to regulator attempting to regulate the sudden rush of gas. As it does this, extra gas may be consumed until the regulator has had time to react. The extra flow of gas may create turbulence around the weld. The Gas flow rate may also temporarily increase due to the back pressure "ballooning" of the gas lines. As the slightly swollen gas lines stabilize, extra gas is propelled as the solenoid opens relieving the back pressure. For MIG, using .3 to .7 seconds is usually enough to allow the "gas rush" to stabilize, unless extra large

shielding cups are used. If over sized TIG cups are used (≥ #10) or longer torch cables are used, increase to 1 to 2 seconds. In TIG Mode, Pre-Flow is manually controlled on the torch with the gas valve.

PowerSet (MIG/ Flux-Cored/TIG/Stick). The welder offers a unique power set menu mode that allows the user to input several operating parameters such as Tungsten/Wire/Electrode Diameter, Metal type, and Material Thickness. In return, the unit will provide a usable range of settings based off the user inputs. It will limit and preset most all other parameters and functions so that the user doesn't have to go through an extensive set-up routine. for the user. For users that are new to the welder or unfamiliar with basic functions or setup, this should be the mode that is used. It is also used to provide settings in lieu of a weld chart. Consider the PowerSet settings to be the weld chart on this unit, but expressed in a digital format.

NOTICE

The MIG arc start will be delayed by the amount of time chosen for Pre Flow. If Pre Flow is set for 2 seconds, the arc will not start for 2 seconds. This is sometimes easy to forget, especially when tacking or spot welding.

⚠ CAUTION



: Always open the regulator slowly, while standing to the side so that if it were to fail parts will be ejected away from you. Never stand over a regulator while opening.

Remote (MIG). Remote refers to the ability to start the arc and control the weld cycle at a distance with the torch switch. It controls how the weld cycle performs.

Shielding Gas (MIG/TIG). Shielding Gas is necessary while MIG or TIG welding. It is not use for Flux-Cored welding on this machine. Shielding gas protects the weld from oxidation by the atmosphere while the weld puddle is still molten. Gas flow rates are controlled by the supplied regulator. Too little gas flow will cause porosity, heavy scale and or oxidation. Too much gas flow is wasteful and can also create a turbulent flow, which can pull the atmosphere into the weld, creating oxidation . *Shielding gas for TIG requires a Gas Valve TIG torch known as a "TIG Rig" to manually control the flow of shielding gas (on/off). It is not controlled by the machine. The recommended shielding gas type is always listed on the display as a reminder.*

Start Wire Feed Speed (MIG/Flux-Cored). This is the starting wire feed speed in MIG mode. This is the starting stage of the weld cycle, at which the arc initiates.

MIG Start Wire Feed Speed is the beginning wire feed speed used to initiate the arc and controls how smooth the arc starts, when combined with upslope. This can serve as a "reverse" hot start by slowing the wire speed at the beginning of the weld while providing a higher voltage.

Spot Weld Timer (MIG). The Spot weld timer simply is an Arc-On timer for MIG and is calibrated in tenths of a second. The function is intended to help the user create better tack welds with improved consistency in weld size and penetration. Once the torch switch trigger is activated and held, the arc will stay turned on for the amount of time selected. After the time has expired, the welding arc will shut down. The Spot function should be used with 2T only. . This is not meant to be used with or serve as a controller for tong-type Spot welders.

Stitch (MIG/TIG). Whereas the Spot function is an "Arc-On" timer, the Stitch timer is an "Arc-Off" timer which works in a continuous cycle as long as the switch is continually held. This creates a repeating on/off cycle that is useful for welding long seams on sheet metal, or creating regular sized spot welds along a object while tacking up an object for fitment.

Up-Slope (MIG). Upslope is the duration in time that it takes for the programming to transition the MIG Wire Feed Speed/ MIG Amperage from the beginning MIG Start WFS/Hot Start Amperage to the full welding Amperage. If MIG Start WFS or Amperage are set higher than the Welding Amp values, then technically it will down slope to the Welding Amp value.

NOTICE

MIG Start WFS is typically set lower than the welding WFS to provide a “reverse” hot start, which maintains a higher voltage value with a reduced wire feed speed to provide a good start without feeding a lot of wire into the weld before the weld is fully pooled.

Voltage (MIG/TIG/Stick). Voltage is the main default control in the left screen. For TIG and Stick, Voltage is not adjustable because the length of the arc will dictate the voltage. This is a static function and only reflects the output voltage and will be displayed in green for TIG and Stick. For MIG/ Flux-Cored use, the voltage is able to be set and controlled. Voltage is also referred commonly to “Heat” when referring to MIG and helps to control the arc length. Too much voltage will cause undercut, while too little will cause poor wet-in of the weld and cold lap at the toes of the weld.

Voltage Reduction Device or VRD (Stick). This function reduces Open Circuit Voltage (OCV) while welding stick. This is required in some applications to comply with safety standards. This reduces high OCV down to 20V or less. This can also make arc starting slightly more difficult. A quick double tap can offset the hard starting. *See specifications on page 12 for OCV data to determine if the use of the VRD is required.*

Wire Feed Speed(Standard MIG/Flux-Cored WFS). This is the main default current control in the right screen. During MIG and Flux-Cored operation, Wire feed speed is expressed in inches per minute or in meters per minute, depending upon the units selected. Note: When the arc is stuck, the display will cease registering WFS and will transition to actively displaying measured welding Amperage.

14 MIG Gun & TIG Torch Parts

24 and 36 series MIG guns, 17V series TIG torch.

SN24 SERIES MIG TORCH PARTS BREAKDOWN

(MB24KD Style)

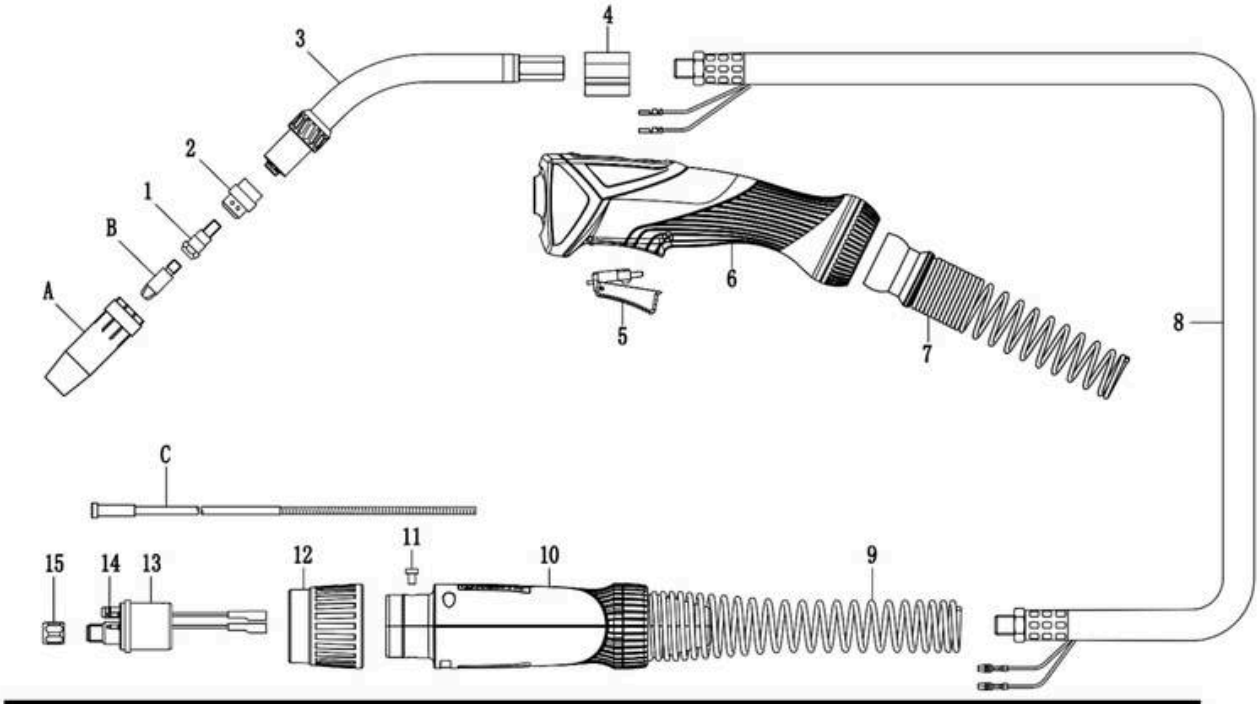

SN24 Series MIG Gun (MB24KD Style)	
Item	**Description**
A	Gas Cone/Nozzle 12.5mm
B	Contact Tip .6mm M6×8×26 (.023″ Heavy Style)
	Contact Tip .8mm M6×8×28 (.030″ Heavy Style)
	Contact Tip .9mm M6×8×28 (.035″ Heavy Style)
	Contact Tip 1.2mm M6×8×28 (.045″ Heavy Style)
C	Red Liner .9 to 1.2 mm (.035″-.045″) Opt. Blue liner for .6 and .8mm (.023″-.030″) Steel. Optional polymer liner for Aluminum
1	Contact Tip Holder
2	Ceramic Diffusor
3	Gun Neck 45°
4	Plastic Receiver Body
5	Trigger
6	Gun Handle

7	Gun End Strain Relief Spring
8	Cable Assembly 3m (9.5 ft
9	Connector Spring Relief
10	Connector Body
11	Screw M4×6
12	Connector Flaring Nut
13	Brass Power and Gas Connector Plate
14	O-Ring 4mm x 1mm
15	Liner Retaining Nut M10×1

North SN36 SERIES MIG TORCH PARTS BREAKDOWN

(MB36KD Style)

Rating:340A CO_2 300A mixed gas, 60% duty cycle, wires: 0.8-1.6mm.

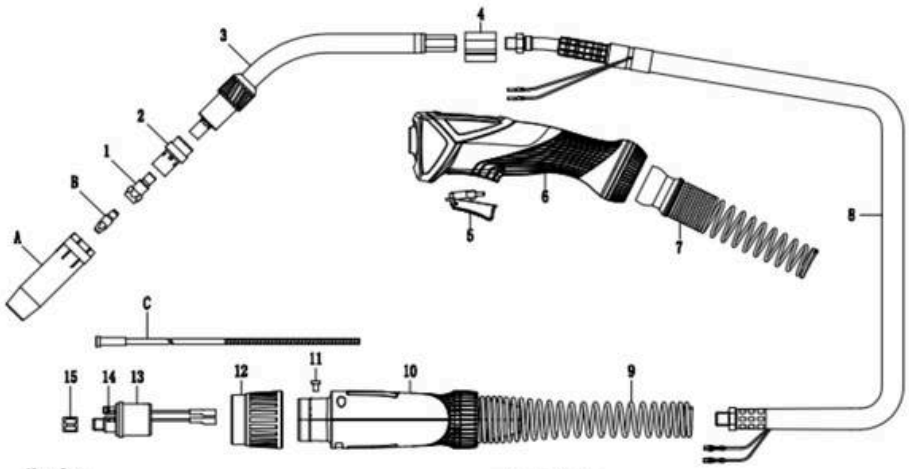

Nozzles

No.	Part Number	Description
A	200620	Tapered Nozzle, 14mm
	200610 *	Conical Nozzle, 16mm
	200600	Cylindrical Nozzle, 20.1mm

Contact Tips

No.	Part Number	Description
B	EB3210	Contact Tip 1.0mm M8×10×30 Ecu
	EB3212 *	Contact Tip 1.2mm M8×10×30 Ecu
	EB3216	Contact Tip 1.6mm M8×10×30 Ecu
	EB3210L	Contact Tip 1.0mm M8×10×30 CuCrZr
	EB3212L	Contact Tip 1.2mm M8×10×30 CuCrZr
	EB3216L	Contact Tip 1.6mm M8×10×30 CuCrZr

Liners

No.	Part Number	Description
C	303630	Steel Liner 2.5/4.5, Yellow, 3m
	303640	Steel Liner 2.5/4.5, Yellow, 4m
	303650	Steel Liner 2.5/4.5, Yellow, 5m

*Denotes Standard Build for Most Sales Regions

Compontents

No.	Part Number	Description
1	EC3001 *	Contact Tip Socket M8×28
	EC3002	Contact Tip Socket M8×32
2	ED3002 *	Diffuser, DMC
	ED3001	Diffuser, Ceramic
3	300636 *	4CE-36 SWAN NECK 45°
	3006362	4CE-36 SWAN NECK 45° SHORT
4	305500	Plastic Body
5	EJ0001B	Trigger
6	NH010216HGG	Handle E16
7	NS0101	Front Spring Cable Support
8	EL3530	Cable Assembly 3m
	EL3540	Cable Assembly 4m
	EL3550	Cable Assembly 5m
9	SM9500	Back Spring Cable Support
10	NH0202HGG	Back Handle
11	Q210406B	Screw M4×6
12	NH020203	Gun Plug Nut
13	EU1001A	Euro Gun Plug
14	Q504010	O-Ring 4×1
15	EU1011	Nut M10×1

Optional 17V Series Air-Cooled Welding Torch (Typical Type)

Parts and Assembly.

DC: 150A @ 60% Duty Cycle

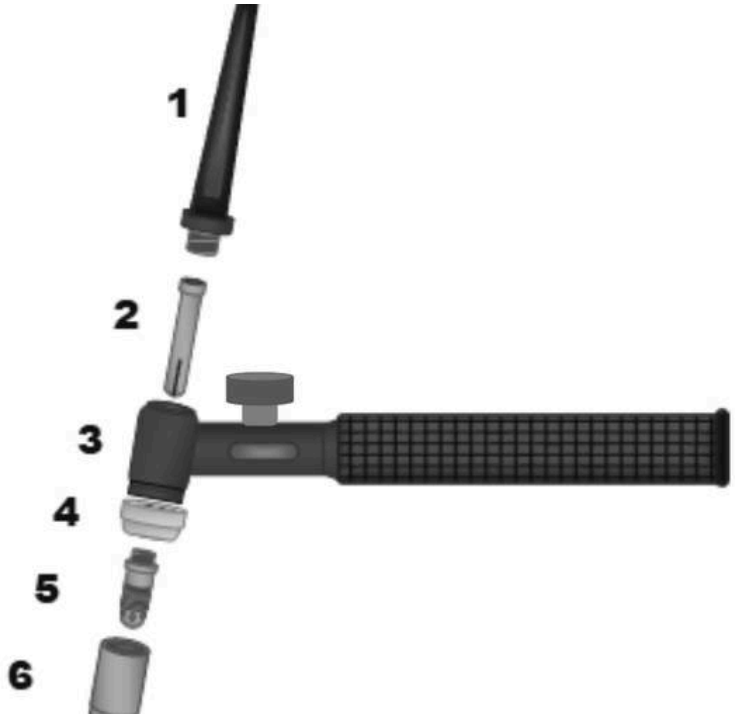

Typical Everlast and NOVA Torch Assembly (17,18, 26 Series)

(Some parts may not appear exactly the same but are equal in assembly order and type.)

Tungsten not included, but available in select Consumable Kits on the website at www.everlastwelders.com.

Consumables are standard sized for series 3 torches, and interchange with consumables made for similar torches with similar nomenclature.

#	Description	Size/Type	Part#	Note
1	Back Cap	Long	NVA57Y04-3	
1	Back Cap	Medium	NVA41V35-3	Or 300M
1	Back Cap	Short	NVA57Y04-3	
2	Collet	.040″	NVA10N22-3	1.0mm
2	Collet	1/16″	NVA10N23-3	1.6mm
2	Collet	3/32″	NVA10N24-3	2.4mm
2	Collet	1/8″	NVA10N25-3	3.2mm
3	Torch Body/Handle	17,26, or 18	Call for App.	Varies by Type
4	Heat Shield	17/26/18	NVA-HS172618	Interchanges with similar aftermarket
5	Collet Body	Universal one size fits 1/16″ to 1/8″	Stock	Universal Collet Body and Collets supplied with original starter kit
5	Collet Body	.040″	NVA-10N30	1.0mm, match to collet size
5	Collet Body	1/16″	NVA-10N31	1.6mm, match to collet size
5	Collet Body	3/32″	NVA10N	2.4mm, match to collet size
5	Collet Body	1/8″	NVA10N28	3.2mm, match to collet size
6	Cup	4	NVA-10N50-3	Standard, non gas lens 1/4″
6	Cup	5	NVA-10N49-3	Standard, non gas lens 5/16″
6	Cup	6	NVA-10N48-3	Standard, non gas lens 3/8″
6	Cup	7	NVA-10N47	Standard, non gas lens 7/16″
6	Cup	8	NVA-10N46-3	Standard, non gas lens 1/2″

15 312i Pro Cage & Undercarriage Assembly

Surround cage and undercarriage (312i Pro).

ASSEMBLY OF THE SURROUND BARS, BRACKETS

AND UNDERCARRIAGE

GENERAL ASSEMBLY INSTRUCTIONS.

1. Lay all items out on a flat surface, with the welder at the center. Take note of the arrangement of items on page 68. Take note of any missing or excess items. Contact Everlast Parts Department if you are missing any items.
2. Carefully turn the welder over and install the undercarriage cross bar onto the bottom of the welder using the hardware supplied. Protect the welder from scratches by using a soft towel as you turn it over.
3. Install the front wheels using four screws for each side.
4. Install the rear wheel brackets using the screws supplied.
5. Install the rear axle by aligning it with the holes in the rear axle bracket..]
6. Install one cotter pin and washer on each side to hold the axle in position.
7. Slide the rear wheels onto the axle.
8. Install a washer and another cotter pin to hold the wheel onto the axle. If there are any extra washers and the wheels are not centered or rubbing on the welder itself, use them to space the wheels properly. If extra washers are needed, source them locally at a hardware store. Make sure the wheels are not slipping back and forth on the axle more than about one washer's width.
9. Double check tightness of all undercarriage screws.
10. Carefully return the welder to the upright position.
11. Orient left and right surround bars on each side of the machine. Take notice of the mounting brackets. The brackets should face the machine side.
12. Stand each surround bar up in place. Using the screws provided, install each surround bar. Attach them loosely until all screw are in place. Make sure that the screws are installed into the front undercarriage cross bar and that they are also installed in the rear section of the undercarriage where the gas cylinder will eventually be installed. Tighten all screws sequentially snugging each one at first before a final tightening. Do not over tighten screws.
13. Install the cable management brackets and gun holder. The cable management brackets do not have to be installed, but it is recommended to keep the cables out of the floor.
14. Install the gun holder on the right (facing front) side of the welder using the screws provided.
15. Install the rear cylinder holders. Take note of the diagram to determine upper and lower bracket positions.
16. Install the safety chain(s) by threading it through the safety catch on the cylinder bracket.
17. After two days of use, recheck and tighten all connection points.
18. After 2 months of use, check and retighten all screws, paying attention to the undercarriage screws and front wheels.

ASSEMBLY OF THE SURROUND BARS, BRACKETS AND UNDERCARRIAGE

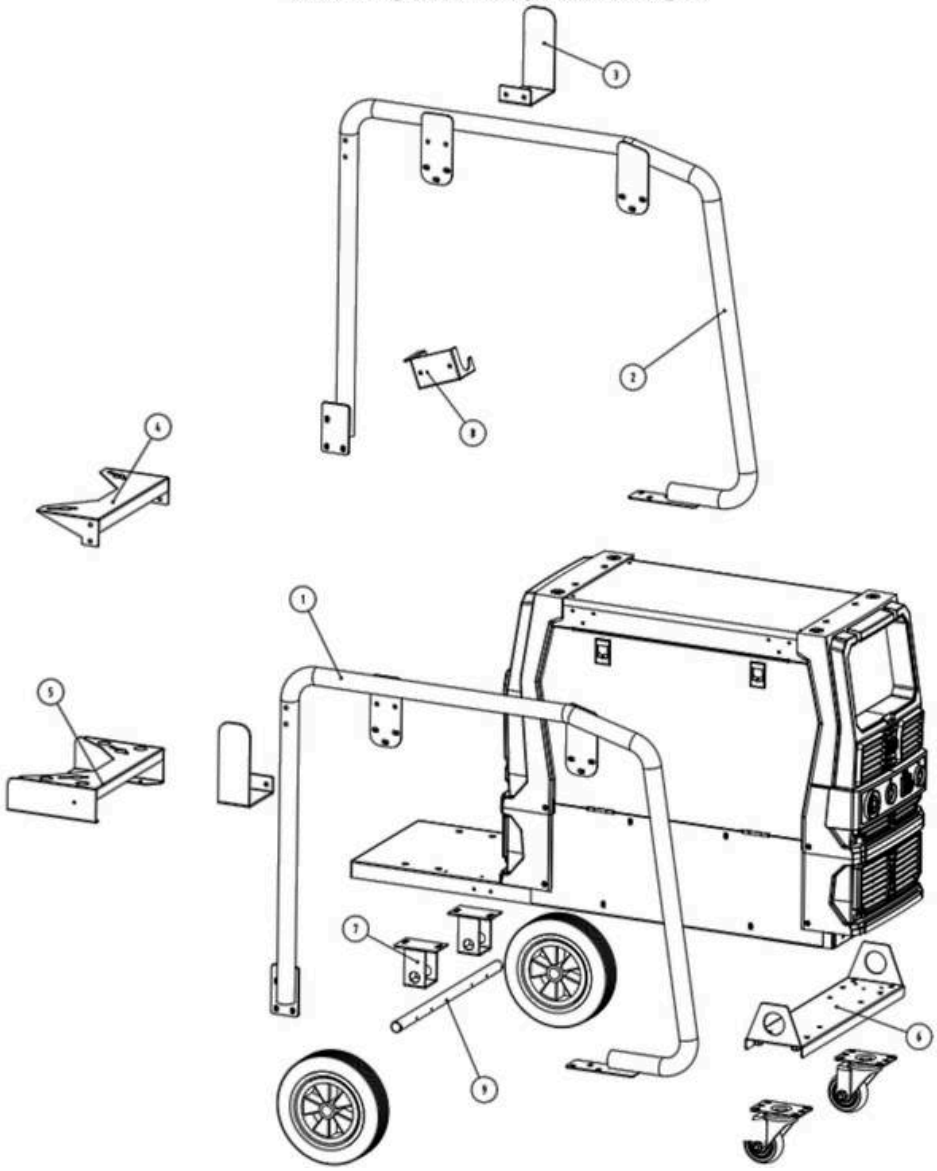

NO	312-6 LIST	model	quantity
1		Left handle	1
2		Right handle	1
3		hook	2
4		Top bottle holder	1
5		Bottom bottle holder	1
6		Torch holder	1

7		M6*16 screw	4
8		M6*45 screw	4
9		M5*12 screw	28
10		M6 nut	8
11		chain	2

16 Troubleshooting & Error Codes

Common welding issues and error codes.

Common MIG/Flux-Cored Welding Issues

NO.	Trouble	Possible Cause	Solution
1.	Unit is switched on, but the fans and display won't run or light up.	Switch damaged. Service Breaker/ Input Line Damaged	Check. Replace.
2.	After welding machine is overheating and the fan does not work.	Fan damaged. Fan connector plus is loose	Replace. Check. Reinstall.
4.	Intermittent, wandering arc.	Work Clamp not connected directly to part being welded. Work Clamp worn/damaged	Reconnect. Replace. Reduce MIG torch height to under 3/8".
5.	Porosity of the Weld. Discolored weld color. Tungsten is discolored.	Low flow rate of shielding gas. High flow rate of shielding gas. Possible gas leaks internally or externally due to loose fittings. Base metal is contaminated with dirt or grease.	Increase flow rate on regulator. Check for kinks in tubing. Increase post-flow time. Reduce stick-out to less than 1/4". Increase gas nozzle size. Clean metal thoroughly with approved metal cleaner, or use acetone and a rag to clean metal.
6.	Weld quality is poor. Weld is dirty/oxidized, or porous.	Drafty conditions. The welder is located on the workpiece and is blowing gas off due to fan activity. Solenoid is sticking. For Flux Core, a certain amount of spatter, haxe and smoke is common.	Eliminate drafts. Move welder. Check if there is sufficient shielding gas left in tank. Check gas flow. Adjust for higher flow of gas. Listen for audible click of gas solenoid. If no click is heard, then contact Everlast Support. Clean weld properly. Increase pre flow or post flow. Check polarity is correct for either MIG or Flux-Core, especially
7.	Unstable Arc. Spatter.	Bad work clamp connection. Metal is indirectly connected through table or other item. Incorrect settings	Change Work Clamp. Use a direct connection to the part being welded. Check and adjust settings. Spatter usually increases when smaller wires are at the maximum welding capacity.
8.	Continuous Overheating	Settings too high. Too large of wire for job. Fan not running.	Reduce Settings, use smaller wire Check fan, repair or replace if not running or running at low speed. If it is not running correctly (fan should run continuously) contact
9.	Other.		Contact Everlast.

Common TIG Welding Issues

NO.	Trouble	Possible Cause	Solution
1.	Unit is switched on, but the power light isn't on.	Switch damaged. Service Breaker/ Input Line Damaged.	Check. Replace.

2.	After welding machine is overheating .	Duty Cycle Exceeded. Fan damaged and not running. Fan connector plus is loose. Temp Sensor damaged Unit is dirty	Do Not Turn off if fan is running. Allow to cool while running and unit should automatically reset. Allow to continue to cool for no less than 15 minutes after duty cycle is exceeded, even if the unit resets before this time. Replace. Check. Reinstall. Check operating temperature in background menu and check fan operation. Check and clean.
3.	When switch/pedal is pressed, no gas flows.	Empty Cylinder/ Closed Valve. Regulator Faulty/shut off. Solenoid Dirty/Stuck Shut. Damaged PCB.	Check. Replace/Open Valve. Check regulator and cylinder. Check. Clean or replace. (Contact Everlast Technical Support). Contact Everlast Technical Support.
4.	When switch/pedal is released gas continues to flow after Post-Flow cycle has timed out. May happen irregularly, or when unit is turned on.	Solenoid Dirty/Stuck. Excess moisture from Argon Cylinder.	Disassemble and clean, or replace. (Contact Everlast Technical Support). Install a dryer inline to remove moisture. Solenoid may need to be cleaned or replaced.
5.	Intermittent, wandering arc.	Work Clamp not connected directly to part being welded. Work Clamp worn/damaged. Torch height too high. Wrong Polarity	Reconnect. Replace. Reduce TIG torch height to under 1/8". Drag Welding Rod (Stick. Torch should be in negative for all TIG work. Stick should be positive.
6.	Arc will not start unless lift started.	Unit is Lift Start Only	Unit is Lift Start TIG rig design. No HF, or amp control is included.
7.	Tungsten is rapidly consumed.	Inadequate gas flow. Too small of tungsten. Wrong shielding gas. Using green tungsten. Wrong polarity. Possible contamination of shielding gas from gas supplier. Welder is too close to work. Fans are blowing gas.	Check gas flow. Check for Leaks thoughout system/regulator/tank. Check for 100% Argon. Use Lanthanated 2% or any other type besides Green (Pure) or Zirconiated. Put torch in Negative terminal. Move unit 6 to 8 ft away.
8.	Tungsten is contaminated, arc changes to a green color.	Tungsten is dipping into weld. Too long of stick-out. Tungsten is melting.	Check and adjust stick out to 1/8". Reduce stick-out to less than 1/4". Reduce amperage or increase tungsten size.
9.	Porosity of the Weld. Discolored weld color. Tungsten is discolored.	Low flow rate of shielding gas. High flow rate of shielding gas. Tungsten stick-out is too far. Too short of post flow period. Wrong TIG cup size. Possible gas leaks internally or externally due to loose fittings. Base metal is contaminated with dirt or grease.	Increase flow rate on regulator. Check for kinks in tubing. Increase post-flow time. Reduce stick-out to less than 1/4". Increase cup size, or use gas lens. Clean metal thoroughly with approved metal cleaner, or use acetone and a rag to clean metal.
10.	Weld quality is poor. Weld is dirty/oxidized, or porous.	Drafty conditions. The welder is located on the workpiece and is blowing gas off due to fan activity. Solenoid is sticking. Too short of pre flow or post-flow.	Eliminate drafts. Move welder. Check if there is sufficient shielding gas left in tank. Check gas flow. Adjust for higher flow of gas. Listen for audible click of gas solenoid. If no click is heard, then contact Everlast Support. Clean weld properly. Increase pre flow or post flow.

11.	Unstable Arc.	Poorly ground or shaped tungsten. Bad work clamp connection. Metal is indirectly connected through table or other item.	Regrind to proper point. Wrong polarity. Place torch in DC negative (-). Connect work clamp directly to item being welded.
12.	Other.		Contact Everlast.

Common Welding Issues

NO.	Trouble	Possible Cause	Solution
1.	Unit is switched on, but the power light isn't on.	Switch damaged. Service Breaker/ Input Line Damaged.	Check. Replace.
2.	After welding machine is overheating .	Duty Cycle Exceeded. Fan damaged and not running. Fan connector plus is loose. Temp Sensor damaged Unit is dirty	Do Not Turn off if fan is running. Set fan to run continuously. Allow to cool while running and unit should automatically reset. Allow to continue to cool for no less than 15 minutes after duty cycle is exceeded, even if the unit resets before this time. Replace. Check. Reinstall. Check operating temperature in background menu and check fan operation. Check and clean.
3.	Intermittent, wandering arc.	Work Clamp not connected directly to part being welded. Work Clamp worn/damaged. Torch height too high. Wrong Polarity	Reconnect. Replace. Stick should be positive.
4.	Arc will not start easily	Wet Welding Rods Low Hot Start Settings VRD is on	Use fresh clean welding rods Increase hot start percent and time. Turn VRD off
5.	Porosity of the Weld. Discolored weld color.	Too long of arc length. Amperage set too high.	Reduce arc length. Reduce amperage.
6.	Weld quality is poor.	Dirty metal. Too much or too little amperage.	Clean metal. Readjust amperage.
7.	Arc goes out while welding	Arc Length too long. Wrong rod selection on machine screen. Poor quality rods or wet rods. Arc length too short with anti-stick turned on.	Shorten arc length and increase arc force. Make sure correct rod is chosen. Use fresh, high quality rods. Turn off anti-stick.
8.	Unstable Arc.	Arc length is too long Metal is indirectly connected through table or other item.	Shorten arc length and increase arc force. Connect work clamp directly to item being welded.
9.	Other.		Contact Everlast.

Error Codes

TROUBLE CODE WITH WARNING LIGHT/UNIT	DIAGNOSIS
E01	OVER TEMPERATURE/ DUTY CYCLE EXCEEDED. Allow unit to rest for 15 minutes while running. The unit should reset. If it does not or condition reoccurs, check for obstacles near unit blocking cooling. Then clean unit internals paying close attention to boards and heat sinks. Make sure unit is unplugged for 10 minutes before opening up for cleaning. Check for proper fan operation.
E02	OVER OR UNDER CURRENT. Check power input cable for length/size, check input voltage. Running on poor quality power supply or dirty power from generator. Possible Internal Issue.
E05	TORCH SWITCH IS STUCK CLOSED. This simply means that the arc has been trying to start and for too long. If this does not clear after releasing the switch, turn off unit immediately and check torch switch for stuck contact. If the torch trigger is engaged without attempting toweld for more than 3 seconds this will activate.
OTHER	CONTACT EVERLAST

17 Maintenance

Care and cleaning.

What is the Cyclone Maintenance Schedule ?

Every 3 to 4 months (or more depending upon use level), the unit should be opened up for inspection and cleaning. Use compressed dry air to blow out dust. Take care to remove any metal dust or other buildup from fan blades and vents. Take time to check the seating of all connectors and accessible wires. *Opening the unit up for cleaning does not void the warranty, but rather preserves it. Neglected cleaning can lead to failures of boards and components. Cleaning is an important and necessary component of operation to maximizing service life and maintaining warranty.* Warranty claims submitted that are a result of neglect or abuse may not be covered under warranty.

⚠ CAUTION



Use Safety glasses and protective equipment when using compressed air or attempting to service this equipment!

To Access and Clean the Unit:

1. Unplug unit for 10 minutes before starting to allow capacitors to discharge.
2. Remove front, middle and rear handle screws. (If handles are not installed, remove top bezel screws on front and rear. Remove any top mounted screws used in lieu of handles.
3. Remove handles.
4. Remove rear plastic bezel screws. Be sure to remove the screws located on the bottom of the bezel.
5. Remove rear bezel. Do not attempt to remove underlying metal case end. The case end is a structural part of the frame.
6. Remove the main green cover screws.
7. Insert fingers under bottom edge of the cover, near the rear of the cover. Gently spread the cover about 1 inch.
8. Slide the main cover to the rear and up carefully to clear any wires or obstructions.
9. When the cover has been removed, use dry compressed air to gently blow off boards and connectors.
10. Check to make sure all connectors are clean and fully seated. Make sure no wires have been unseated from the connectors themselves.
11. Clean bezel vents and fan blades. Fan blades accumulate build-up which can cause reduced cooling efficiency, vibration and eventually failure.
12. Once cleaned, reassemble unit in reverse order.

IMPORTANT: *Never remove the front cover or front upper operator's panel unless instructed by Everlast.*

A Settings Quick Reference

Starting points only.

These are starting settings only. PowerSet gives settings for your specific wire, rod or tungsten and thickness. Position, joint design and technique all change the ideal setting.

MIG Starting Settings

Setting	Steel C25	Steel C100	Stainless	Aluminum	Flux-Cored
Inductance, manual MIG	25–35%	10–20%	10% or less	40–60%	35–60%
Wire tension (dial)	3–3.5	3–3.5	3–3.5	2–2.5	2–3
Gas	75/25 Ar/CO_2	100% CO_2	98/2 Ar/CO_2	100% Ar	None (gasless)
Polarity	+	+	+	+	– (gasless)

Timers

Setting	Start Here
Pre-flow	about 0.5 s
Post-flow	3–5 s
Burn-back	0.02–0.2 s
Wire stick-out (trim)	1/4"–3/8" (6–9 mm)

Inductance, PowerSet section

Wire / Gas	Start Here
Steel, C25	65–75%
Steel, C100	80–90%
Stainless	90% or more
Aluminum	40–60%
Flux-cored	35–60%

Stick

Rod	Hot Start	Arc Force
Iron powder / titania	40–50%	20–40%
Cellulose (E6010)	70–90%	60–85%

"Wet" low-hydrogen rods may need settings like cellulose.

Tungsten (DC TIG)

Amps	Tungsten
2–15 A	.020" (0.5 mm)
10–70 A	1/16" (1.6 mm)
15–200 A	3/32" (2.4 mm)
30–250+ A	1/8" (3.2 mm)

2% lanthanated; grind length 2–2.5 × diameter.