Publish Date: May 2021
EVPPLSMA62102 Rev. 1
USA/North America
©Everlast Power Equipment

EVERLAST
IGBT INVERTER TECHNOLOGY

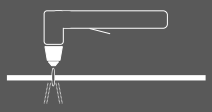

DC
60A
80A
&
100A

PowerPlasma i Series

Safety, Setup and General Use Guide For
PowerPlasma 62i, 82i, and 102i



FUNCTION: **Plasma Cutter**
PURCHASE DATE:
PLASMA CUTTER MODEL NAME:
CNC OPTIONAL TORCH INFO:
PLASMA CUTTER SERIAL NUMBER:
OPTIONAL ACCESSORY SERIAL NUMBER:

Operator's Manual

www.everlastwelders.com
Need Parts? Need Technical Help? Call: 1-877-755-9353
380 Swift Ave. Unit 12 South San Francisco, CA 94080, USA

EVERLAST
IGBT INVERTER TECHNOLOGY
Welders, Plasma Cutters, Multi-Process

TABLE OF CONTENTS

SPECIAL NOTICE AND CALIFORNIA PROPOSITION 65 WARNING	3
CUSTOMER GREETING AND EXPLANATION OF PROCEDURES	4
WARRANTY AND CONTACT INFORMATION	5
SAFETY DISCLAIMER AND HF WARNING	6
SAFETY WARNINGS, DANGERS, CAUTIONS AND INSTRUCTIONS	7
GENERATOR OPERATION INFORMATION	10
SPECIFICATIONS	11
DUTY CYCLE AND CNC USE INFORMATION	12
GETTING STARTED, UNPACKING YOUR UNIT AND INSPECTION	14
CONNECTING YOUR UNIT TO THE POWER SOURCE AND WIRING INFORMATION	15
CONNECTION OF AIR COMPRESSOR, REGULATORS, AND BASIC REQUIREMENTS TO PLASMA CUT	16
CONNECTING THE PLASMA TORCHES, HAND AND CNC SETUP INFORMATION	17
FRONT PANEL VIEW AND COMPONENT ID	18
REAR PANEL VIEW AND COMPONENT ID	19
PLASMA CUTTING OPERATION WARNINGS AND SAFETY INFORMATION	21
EXPLANATION OF PLASMA FUNCTIONS AND TERMS	22
STARTING CUTS AND PIERCING INFORMATION	23
CONSUMABLE INFORMATION, CORRECT CUT AND TRAVEL SPEED INFORMATION	24
PLASMA CUTTING TORCH PARTS AND ASSEMBLY POWERPLASMA 62i AND iPT60 TORCH	27
PLASMA CUTTING TORCH PARTS AND ASSEMBLY POWERPLASMA 82i AND iPT80/iPTM80 TORCH	29
PLASMA CUTTING TORCH PARTS AND ASSEMBLY POWERPLASMA 102i AND iPT100/iPTM100 TORCH	31
CNC CONNECTOR PINOUT AND CONNECTION INFORMATION	33
ADDITIONAL TORCH AND CNC INFORMATION	34
TROUBLESHOOTING ERROR CODES	35
TROUBLESHOOTING COMMON PLASMA CUTTING ISSUES	36

NOTICE:

Product Specifications and features are subject to change without notice. While every attempt has been made to provide the most accurate and current information possible at the time of publication, this manual is intended to be a general guide and not intended to be exhaustive in its content regarding safety, welding, or the operation/maintenance of this unit. Due to multiple variables that exist in the welding field and the changing nature of it and of the Everlast product line, Everlast Power Equipment INC. does not guarantee the accuracy, completeness, authority or authenticity of the information contained within this manual or of any information offered during the course of conversation or business by any Everlast employee or subsidiary. The owner of this product assumes all liability for its use and maintenance. Everlast Power Equipment INC. does not warrant this product or this document for fitness for any particular purpose, for performance/accuracy or for suitability of application. Furthermore, Everlast Power Equipment INC. does not accept liability for injury or damages, consequential or incidental, resulting from the use of this product or resulting from the content found in this document or accept claims by a third party of such liability.

⚠ WARNING!

California Proposition 65 Warning:

This product, when used for welding or cutting, produces fumes or gases which contain chemicals known to the State of California to cause birth defects and, in some cases, cancer. (California Health & Safety Code § 25249.5 et seq.)

⚠ Warning: Cancer and/or Reproductive Harm

www.P65warnings.ca.gov

THANK YOU! We appreciate you as a valued customer and hope that you will enjoy years of use from your plasma cutter. We work to please the customer by providing a well supported, quality product. ***To make sure that you receive the best quality ownership experience, please see below for important information and time sensitive details.***

What to do right now:

1. Print your receipt from your confirmation email that should have been sent to you after your purchase and put it up for safe keeping. If you do not have one, contact us at 1-877-755-9353 (US customers) or 1-905-570-1818 (Canadian Customers). You will need this if anything should ever happen for original owner verification (if bought as a gift, original receipt will still be needed, or explanation sent to Everlast).
2. Read this manual! A large number of tech and service calls are a result of not reading the manual from start to finish. Do not just scan or casually peruse this manual. There are different features and functions that you may not be familiar with, or that may operate differently than you expect. Even if you have expertise in the field of welding, you should not assume this unit operates like other brands or models you have used.
3. Carefully unpack and inspect all items immediately. Look for missing or damaged items. Please report any issues within 48 hours (72 hours on weekend or holidays) of receiving your product,. Take pictures if you are able and contact us at 1-877-755-9353, ext. 207 if any issue is discovered between 9 am and 5 pm Eastern Time M-F (US customers) or at 1-905-570-1818 (Canadian Customers) between 9am and 4 pm weekdays except on Fridays when hours are from 9 am to 12pm Eastern. If outside of the US or Canada, contact your in-country/or regional distributor direct at their service number.

What to do within the next 2-3 days:

1. Make sure your electrical system is up to date and capable of handling the inrush and rated current of the unit. Consult and use a licensed and knowledgeable electrician. If you have downloaded this manual in expectation of delivery, get started now.
2. Make sure this machine is plugged in, turned on, and tested with every process and major feature, checking for proper function. You have a 30 day period to test and thoroughly check out the operation of this unit under our 30 day satisfaction period. If something is wrong, this policy covers shipping on the unit (30 day satisfaction policy applies to the USA only for the 48 lower states and D.C., territories and provinces are excluded) or any incidental parts that may be needed to resolve any issue. After this 30 day period, if you find something wrong with the unit, you will not receive the benefit of free shipping back and forth to resolve this issue. Your unit is still covered under the 5 year parts/labor warranty, but shipping is covered by the customer after the 30 day period is over. The first 30 days of operation with any electronic item is the most critical and if any issue will happen, it will often happen during this time. This is why it is very important that you put this unit to work as soon as possible. Any issue should be reported within 48 hours (72 if on the weekend or holiday). Everlast will not be liable for any shipping after that time.

What to do within the next 30 days:

Visit our website (US customers). Go to www.everlastwelders.com. Navigate to the resources tab and to the "product registration" page to register your product. While keeping your receipt/proof of purpose is still required for verification of ownership, registering will help us keep your details straight and establish a chain of ownership. Don't worry, though, your warranty is still valid if you can't do this. Remember: Always keep your receipt even if you register. You may want to staple a copy to your manual.

What to do if you have a warranty issue or problem with the unit:

1. Unplug the unit. (Also do this before any maintenance or cleaning is done.)
2. Do not attempt a self-repair until authorized by an Everlast representative. This does not include performing routine maintenance such as point gap adjustments or regular internal cleaning. Any third party repairs are not covered under warranty, and can further damage your unit.
3. Within 24-48hours, (or by the next working business day) you must contact U.S. tech support at 1-877-755-9353 ext 207(U.S. hours are 9 am to 5pm Eastern for tech support and 9 am to 5 pm Pacific for the business/sales office). If you are in Canada contact 1-905-570-1818 (Canada hours are 9am to 4pm M-Th, 9am to 12pm Fri). Although phone contact is preferred to establish a warranty claim, you may send an email to tech@everlastwelders.com (US) or mike@everlastwelders.ca (Canada) along with your contact information and brief explanation of the issue and ask for a follow up call. If you contact us via phone, and you do not reach a live person, please leave a brief message with the nature of your problem and your contact information. You should expect a call back within 24 hours. It is also a good idea to follow up the message with an email.
4. Be prepared with as much information as possible when you talk with a tech advisor, including a details of the failure, settings, and application of the unit. ***NOTE: A Proof-Of-Purchase (receipt) is required before returning the unit for warranty or before warranty parts can be sent to you.***
5. Keep in mind that, you may be asked to check a few basic things. Before you call, having a screwdriver and volt/ohm meter at hand is a good idea and will save time. Many issues can be resolved over the phone. If the issue cannot be resolved over the phone/email, you may be given an option to return the unit, or have a part shipped to you, at Everlast's discretion. Keep in mind, you may be asked questions that seem basic, or elementary to your knowledge base. These are not meant to question your knowledge, but rather to make sure nothing is overlooked. However the tech chooses to proceed, please cooperate with the process, even if you think you know what the cause or issue is. You may be asked to check something or open the unit during the diagnosis. This does not void the warranty! Opening the unit is a part of routine maintenance and cleaning. This is an important step. The willingness of the customer to work with tech support can save lots of time and accelerate the warranty process. For

warranty to be honored, you will need to make sure that you follow these guidelines. ***Units that are returned without an RMA (issued by the tech support department) may not be repaired under the warranty agreement and you may be charged for the repair and can result in a delayed repair as well.***

What to do if you need setup help, guidance, weld issue diagnosis or have general product compatibility questions.

Call us at 877-755-9353 ext. 204 for welding guidance and general welding issue diagnosis. Or email performance@everlastwelders.com with the basic issue you are having, along with your specific settings, and welding application.

Hey...wait, what is my warranty?

Warranties and service policies and procedures vary from country to country and are maintained and supported by the regional or in country distributor of Everlast welding equipment.

USA Customers Only: For full details on the 5 year parts and labor warranty, 30 day satisfaction policy, terms of sale, and how to proceed with a warranty claim, please visit: https://www.everlastgenerators.com/standard-warranty. Accessories are covered by a separate warranty and detailed information can also be found at the link above.

Canada Customers Only: For full details on the 3 year parts and labor warranty, terms of sale, and related policies and procedures, please visit: https://www.everlastwelders.ca/terms.php.

Who do I contact?

USA Technical Support:

Email: tech@everlastwelders.com
1-877-755-9353 ext. 207
9am-5pm Eastern (Closed holidays)
Monday-Friday

USA Welding Support and General Product Information:

Email: performance@everlastwelders.com
1-877-755-9353 ext 204
9am-6:30 pm Eastern (Closed holidays)
Monday-Friday

USA Sales and Main Office:

Email: sales@everlastwelders.com
1-877-755-9353 ext 201
9am-5pm Pacific (Closed holidays)
Monday-Friday

Canada Technical Support:

Email: mike@everlastwelders.ca
905-570-1818
9am-4pm Eastern Monday-Thursday
9am-12pm Eastern Friday

Canada Sales and Main Office:

Email: sales@everlastwelders.ca
905-570-1818
9am-4pm Eastern Monday-Thursday
9am-12pm Eastern Friday

Other Countries and Regions:

Visit the U.S. Website @ www.everlastwelders.com and click on the flag of the country or region represented that is closest to you. If your country or region is not found, call the U.S. office at 1-650-588-8588 between the hours of 9am to 5pm Pacific, Monday through Friday.



Safe operation and proper maintenance is your responsibility.

Everlast is dedicated to keeping safety a top priority. While we have compiled this operator's manual to instruct you in basic safe operation and maintenance of your Everlast product, it is no substitute for observing safe welding practices and behavior. Safe welding and related cutting operations require basic knowledge, experience and ultimately the exercise of common sense. **Welding does significant hazards to your health and life! Exercise extreme caution and care in all activities related to welding or cutting. Your safety, health and even life depends upon it.**

WARNING! If you do not have proper knowledge or capability to safely operate this machine, do not use this machine until proper training has been received!

While accidents are never planned, preventing an accident requires careful planning. Stay alert!

Please carefully read this manual before you operate your Everlast unit.

The warranty does not cover damage or harm created by improper use. neglect of the machine or failure to follow safe operating practices.

NOTICE:	
	Welding and cutting operations may generate undesirable High Frequency (HF) and EMF energy. This can interfere with surrounding electronic equipment such as computers, routers, CNC equipment, televisions, radios, fluorescent lighting etc. If disturbance in surrounding electrical and electronic equipment is noted, consult a licensed electrician to help properly ground surrounding equipment to limit the interference. This machine may cause GCFI and ground fault outlets to malfunction. This unit is designed to be operated on a dedicated, properly grounded circuit.

Safety Warnings, Dangers, Cautions and Instructions

	**NOTICE.** This unit manual is intended for users with basic knowledge and skillset in welding. It is your responsibility to make certain that the use of this plasma cutter is restricted to persons who have read, understand and follow the warnings and instructions in this manual. If you or the operator needs further instruction, contact Everlast welding support at 1-877 755-9353 ext. 204 or seek qualified professional advice and training.
	**WARNING!** High Frequency (HF) energy can interfere with the operation of pacemakers and can damage pacemakers. Consult with your physician and pacemaker manufacturer *before* entering an area where welding and cutting equipment is in operation and *before* using this plasma cutter. Some pacemakers have limited shielding. Alert any users or customers of this potential problem.
	**WARNING!** Use approved safety glasses with wrap around shields and sides while welding and working in the weld area or serious eye damage or loss of vision may result. Use a grinding shield in addition to the safety glasses during chipping and grinding operations.
	**WARNING!** When welding always use an approved welding helmet or shielding device equipped with at least an equivalent of a shade 9 or greater. Increase the shade number rating as amperage increase over 100 amps. Inspect helmet for cracks in lenses and in the helmet. Keep lens covers in good condition and replace as necessary.
	**WARNING!** Welding/cutting operations carry inherent risks which include but not limited to possible cuts burns, electrical shocks, lung damage, eye damage and even death. Take all appropriate measures to use proper Personal Protective Equipment (PPE). Always use leather welding gloves, closed toe (preferably reinforced or steel toe leather shoes, and long -sleeved flame resistant clothing (i.e. denim). Do not wear Poly/Nylon blend materials.
	**DANGER!** Welding/cutting poses shock and electrocution risks. Keep this welding equipment dry. **Do not weld in the rain or where moisture accumulates.** Use dry, rubber soled shoes, gloves and clothing when welding. Do not rest or contact work clamp (ground) when welding. Keep all parts of the body insulated from the part being welded when possible. Do not touch terminals or connections while the unit is on. Consider all parts to be "live" at all times even if no live work is being performed. Do not use frayed welding cables.
	**CAUTION!** Fires are possible but also preventable while welding. Always remove flammable rags, papers, and other materials from the weld area. Keep rags stored in an approved flame proof canister. Keep a fully charged fire extinguisher at hand. Remove any fuels, oils, paint, pressurized spray cans, and chemicals from the weld area. Make sure any smoke/fire detectors are function properly. Do not weld on tanks, drums or barrels, especially if pressurized or sealed. Do not weld on any container that previously held fuel or chemicals. Make sure the weld area is clear of flammable materials such as grass or wood shavings solvents and fuels. Do not wear frayed or loose clothing. Visually inspect and recheck the work area after welding looking for smoldering debris or flames.
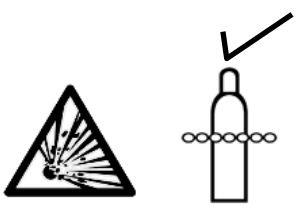	**WARNING!** Welding gas cylinders are under high pressure. Keep all gas cylinders upright and chained to a cart or held safely in a safety holding pen. Never transport gas cylinders in an enclosed car van or other vehicle. Transport gas cylinders securely. Keep all cylinders capped while not in use or during transport. Replace the cap on the cylinder when it is going to be more than 24 hours before use. Do not use or attempt to repair faulty regulators. Never weld on gas cylinders. Keep gas cylinders away from direct sparks.

Safety Warnings, Dangers, Cautions and Instructions

	**DANGER!** Welding and cutting operations pose serious inhalation hazards. Some of these hazards are immediate while others are cumulative in their effect. **Do not weld in enclosed spaces or in areas without adequate ventilation.** Fumes and gases released in the welding and cutting operations can be toxic. Use fans or respiration equipment to insure adequate ventilation if you are welding in a shop or garage area. **Do not weld on galvanized metal under any circumstance. You may develop metal fume fever. Symptoms are similar to lu-like symptoms. Seek medical advice and treatment if you are exposed to galvanized welding fumes.** **If you experience any eye burning, nose or throat irritation while welding, these are signs that you need more ventilation.** If you feel these symptoms: • Stop work immediately and relocate work area with better ventilation. • Wash and clean your face and hands. • Stop work completely and seek medical help if irritation persists
	**DANGER! Never use brake cleaner or any chlorinated solvent to clean or degrease metal scheduled to be welded or other related equipment in the area being welded.** The heating of this cleaner and its residue will create highly toxic phosgene gas. Small amounts of this vapor are harmful and can lead to organ failure and death. If degreasing of a part is necessary, use Acetone or an approved pre-weld cleaner. Use the proper personal protective equipment (PPE) when handling any cleaners/solvents.
	**DANGER! People with pacemakers should consult a physician and pacemaker manufacturer before welding. There is a potential for damage or serious malfunction resulting in death. High Frequency energy (HF)/Electromagnetic Fields generated during welding can interfere with pacemaker signals, even permanently damaging it. Some pacemakers offer some shielding, but restrictions regarding amperage and HF starting of TIG arcs may be placed upon the individual. Warn all potential bystanders that they should exit the work area if they have a pacemaker or similar medical equipment before welding. Severe electrical shock leading to injury or death may occur while using the plasma cutter if the user becomes part of the circuit path. While the Amp output of the plasma cutter is limited, the unit may produce an OCV of 300V or greater. Consult with a Physician if a pacemaker is expected to be implanted.**
	**DANGER!** Never defeat or modify any safety guards or shields. Keep all safety covers and shields in place. Never place your fingers in or near a fan shroud or insert any object into the fan(s).
	**DANGER! Do not supply more than 100 PSI to the air-pressure regulator supplied with this machine.** If you do, the regulator may leak or explode, causing severe injury or death. Use a separate regulator mounted at the air-compressor to control supply air pres-

Safety Warnings, Dangers, Cautions and Instructions

	**CAUTION!** Trip Hazards exist around plasma cutters. Cords, cables, welding leads and hoses pose a trip hazard. Be aware of their location and inform others of their location. Tape and secure them so they will stay out of high traffic areas.
	**CAUTION!** Welded metal can stay hot long after welding is completed. Burns may occur. Always wear gloves or use tongs/pliers when handling welded or cut metal. Remember the heat from the metal may catch other material on fire. Always have a fire-proof area ready to place welded components until they fully cool. Use soap stone or a metal marking marker to label the metal as "HOT" to serve as a reminder to all present in the area.
	**CAUTION!** Welding and cutting operations generate high levels of ultraviolet (UV) radiation which can burn and damage skin and eyes. The intensity is so high that exposed skin and eyes can burn in a few minutes of exposure. Minimize direct skin and eye exposure to this intense form of radiation by using proper PPE and sun screen where appropriate.
	**CAUTION!** Do not allow bystanders. Do not allow others without proper Personal Protection Equipment (PPE) suitable for welding to stand in the welding area or to observe welding and welding related activities. If protection is not readily available, use a welding screen to separate the welding area from the rest of the area. If no protection or screen is available, physically exclude them from the welding area by a wall or other solid divider. Keep all pets and young children away from the welding area.
	**CAUTION!** Electromagnetic Fields can be generated by this plasma cutter and radiate into the work place. The effect of EMF is not fully known. Exercise caution when welding by: NOT draping welding leads (guns/cables) over your shoulders or arms, NOT coiling them around your body, NOT inserting yourself directly between the cables, and by NOT contacting the unit while welding. DO keep the work clamp connected as close as possible to the area of the weld and directly to the object being welded whenever possible.
 	**DANGER!** Never touch connectors or fittings while this machine is turned on. Keep all safety covers in place when not in use. **Never remove or replace the plasma consumables while the machine is turned On.** Even though the torch is equipped with a "parts-in-place" safety disconnect, it is possible that overheating of the torch, excessive wear or damage to the consumables may cause this feature to malfunction. Make sure the brass safety cut out pins on the torch head remain in good repair and that the spring loaded function remains operational and keeps them fully extended when the torch cap is removed. The Open Circuit Voltage (OCV) while in plasma mode may exceed 300V. This is enough to cause burns, injury severe electrical shock, injury and instant death.

Important Information: Operating this unit with a generator or other off-grid service.

This plasma cutter unit should only be operated on a generator certified by its manufacturer to produce clean power. Clean power is equivalent to the quality of household or shop/garage type power. This means the generator must have 5% or less total harmonic distortion (THD) of the Sine wave. If you are unsure of the power output type of the generator, contact the manufacturer of the generator for verification. *Do not operate on square wave or modified square wave generators or converters/inverters or damage or malfunction may occur. Damage caused by running this unit off of "dirty" power or modified sine waves may not be readily apparent and can be cumulative in nature. However, damage may present itself immediately. The damage caused by running this unit on "dirty" power usually leaves internal tell-tale signs and damages specific parts.*

For recommendation for generator size, consult the specification page for surge wattage recommendations. Operating the unit on underpowered generators and/or on generators not rated with 5% or less THD can damage your unit. *The generator manufacturer determines this rating, not Everlast.* Do not assume that a name brand generator, or a "new" generator automatically provides clean power. Price paid does not guarantee a clean power output either. There are multiple brands at various price points capable of producing clean power. Investigate this before purchasing a generator. The manufacturer will usually state that a unit is clean power in the advertising information and will state actual THD. If the manufacturer does not state it, contact the manufacturer directly for a statement concerning actual THD.

NOTICE! Operation of this unit with generators not rated by its manufacturer as providing clean power (5% or less THD) is prohibited and will void the warranty. Operation with modified sine wave, or square wave generators and inverters/converters/UPS that do not produce "sine wave" output is prohibited and doing so will also void the warranty. Use only with generators/inverters/converters that produce an equivalent type of sine wave used in shops, homes and "shore" type systems.

WARNING! Do not start or stop the generator with the plasma cutter switched on. Never use the generator in ECO mode or an auto-idle mode. Even with a clean power rated generator, this action can damage the unit. *Turn on the plasma cutter only after full generator R.P.M. has been achieved and the engine is sufficiently warmed up.* Closely monitor generator fuel level so that the engine R.P.M doesn't drop or completely shut down with the plasma cutter plugged in. **For best practice: do not start or stop the generator with this plasma cutter plugged in, even if it is turned off. Unplug the plasma cutter before shutting down the generator.**

If using with a welder/generator, make sure the manufacturer has determined that the generator portion produces a clean sine wave. Many older models do not. Some newer models use "divided" power between welding and generating and cannot supply the full power to the plasma cutter unless the fine current control knob is turned to maximum. Do not use this unit with such welder/generators unless the Power/fine current control is turned to 100%. Some welder generators do have a separate alternator for generating power. If this is the case, be sure not to weld or load the machine while this unit is in use.

WARNING! Always make sure any generator or welder generator is properly grounded, according to local code. Ground the machine per the generator manufacturers instructions to meet code. Improperly grounded generators may damage the machine and more importantly may cause severe injury or death.

Single Phase 240V Operation:

This unit should be used with single phase 220/240V output. However, the unit may be used with single phase 208V if the voltage does not drop below 205V. If using this unit on 208V, duty cycle and display accuracy may be affected. Rated and Inrush Amperage will rise proportionately as well. If you decide to use this machine on 208V, before installing permanently, have an licensed electrician monitor voltage fluctuations, particularly under load and during peak use times. If the voltage remains constant, and steady without dropping below the 205V threshold, this unit may be used. Damage caused by using on undervoltage power sources is not covered by the warranty. Long arcing of the plasma may also increase amp demand. 240V and 480V Three phase operation is optional and special ordered.

WARNING!

Never use the electrical power outlet on the back of this machine for anything other than powering an Everlast brand water cooler. This is a special outlet designed to produce 240V with limited amperage draw. No other device or brand should be used in conjunction with this unit's outlet. This outlet is designed to supply 240V only. Do not attempt to modify, or change this outlet for use with anything else other than an Everlast brand water cooler designed for 240V operation. Severe damage, fire or injury may occur if other devices or other brand equipment is connected.

Specifications

Specifications	PowerPlasma 62i	PowerPlasma 82i	PowerPlasma 102i
Inverter Type	Digitally Controlled IGBT Inverter		
Minimum/Maximum Rated Output	20A/88V - 60A/104V	20/88V-80A/112V	20A/88V-100A/120V
Start Type	Standard Blow-Back Type, NON-High Frequency Starting(No points or point gap, no HF operation, safe for CNC use)		
Torch Type Manua l/ CNC Option	iPT60 12 ft. /iPT60M 25 ft.	iPT80 12 ft./ iPT80M 25ft.	iPT 100 12 ft./iPT100M 25ft.
Duty Cycle @ Rated Amps/Volts (40° C) (Output V/A)	60% @ 60A/ 104V 100% @ 50A/ 100V	60% @ 80A/ 112V 100% @ 60A/ 104V	60% @ 100A/ 120V 100% @ 80A/ 112V
OCV (U_0)	300V	300V	300V
Voltage Input (U1)	240V 50/60Hz 1 Phase (±10%)	240V 50/60Hz 1 Phase (±10%)	240V 50/60Hz 1/3 Phase (±10%) (480V Optional Special Order)
Maximum Inrush Amps (I1MAX) @ 240V	38A	55A	78.2A @ 240V 1 Phase /45.2A @ 240V 3 Phase (***Optional 3 Phase:*** ; 20.6A @ 480V)
Maximum Rated Effective Amps (I1EFF)	30A	43A	61A @ 240V 1 Phase / 36A @ 240V 3 Phase (***Optional 3 Phase:*** 480V 17A)
CNC Port/ CNC Capable	Yes (Order CNC package to receive plug for port, or order plug separately)		
Air Post Flow Timer	Adjustable, 10-60 Seconds		
Air Compressor Requirement and Recommendations. **NOTICE:** *Pancake type and small oil-less compressors are not suitable.*	**4.5 - 5 CFM @ 90 PSI (127-142 lpm @ 6.2 bar)** Use a compressor with a minimum output of 5.3 CFM @ 90PSI (150lpm @ 6.2 bar), with 30 gallon (114 Liters) capacity or higher. For CNC operation use 9 CFM @ 90 PSI (256lpm @ 6.2 bar) with 60 gallon (227 Liters).		**7-8 CFM @ 90 PSI (200-225 lpm @ 6.2 bar)** Use a compressor with a minimum output of 9 CFM @ 90PSI (256lpm @ 6.2 bar) with 60 gallon (227 Liters) or higher.
Duty Cycle/ Over Current Protection	Yes, Self-diagnosing feature. *(See code references at the end of this manual.)*		
Minimum Operating Air Pressure (Set and check air-pressure with "Air-Check" engaged.) **NOTICE:** *Low Air Pressure will interrupt output and display error code (E03).*	Approximately **43-45 PSI (2.8 bar)** (safety cut-out threshold)		
Recommended Cutting Air Pressure:	Use Target Air Pressure green/red/ yellow LEDs and white arrow on panel to identify and set proper operating pressure. Varies by process.		
Maximum Supplied Air Pressure	90 psi (This is incoming pressure from the air compressor, not operating, or (From Compressor/Tank) cutting pressure.) The air compressor **MUST** have a separate pressure regulator at the tank or inline to control maximum supply pressure.		
Recommended Maximum Daily Average Cut Thickness ***(Steel, Hand Cut)*** **NOTICE:** Decrease 35-40% for Aluminum and Stainless Steel (INOX).	5/8" (15.8mm)	1" (25mm)	1 1/4" (31mm)
Recommended Maximum Daily Average Cut Thickness ***(Steel with CNC and Auto-Cutting Mechanisms)*** **NOTICE:** Decrease 40-45% for Aluminum and Stainless Steel (INOX). **NOTICE:** *CNC operation has limiting factors that reduces operation Average Cut Thickness capability. This includes duty cycle, inability to manipulate torch for piercing duties, cut speed requirements/ expectations.*	3/8" (9.5mm)	5/8" (15mm)	7/8" (22mm) .
Rated Maximum Quality Cut @ 10-12 IPM (@ 250-300mm / min) ***(Steel, Hand Cut)*** **NOTICE:** Decrease 35-40% for Aluminum and Stainless Steel (INOX).	1" (25mm)	1 1/4" (31mm)	1 1/2" (38mm)
Max Severance Cut @ 3 IPM (75mm / min) ***(Steel, Hand Cut)*** **NOTICE:** Decrease 35-40% for Aluminum and Stainless Steel (INOX).	1 1/4" (31mm)	1 7/16" (36mm)	1 3/4" (44mm)).
Gouging Limit (approximate gouge depth/width)	1/8"x 3/16" (3mm x 4.5mm) (40A limit with standard consumable)	3/16"x 3/16" (4.5mm x 4.5mm) (Use Gouging Consumable)	3/16"x 1/4" (4.8mm x 6mm)
Minimum Water Ingress Protection Standard	IP21S		
Efficiency	>85%		
Cooling Method	Full time High Velocity Fan		
Dimensions (approximate)	18" H x 10" W x 25" L (320mm x190mm x 355mm)		
Weight (Bare Unit)	50 lbs. (21kg)	51 lbs. (21kg)	53 lbs. (22kg)
Generator Requirement (Surge Rating) **WARNING!** The generator must be rated for clean power output, defined as 5% Total Harmonic Distortion (THD) or less, or it will void warranty!	10,000 W	13,00 W	17,500 W
Minimum Storage/ Minimum Operating Temperature	Storage: -10°F/-23°C Operating: 14°F/-10° C		

Specifications

Duty Cycle

Duty Cycle is simply the amount of time out of a 10 minute period in which the unit can operate. For example, if this unit has a duty cycle of 60% at maximum output means that the unit can be operated for 6 minutes out of 10 minutes. This may be continuously, or intermittently during the 10 minute period of time. This rating standard (United States) is based on a maximum ambient temperature of 40°C. Operating above this point, or at lower temperatures with high humidity may reduce the duty cycle rating. Of course, the duty cycle may increase somewhat as ambient temperature drops. Regardless, this unit's duty cycle is not controlled by a timer. Rather, this unit is equipped with a heat sensor located on a heat sink near the critical power components of the plasma cutter. If the operating temperature of the unit is exceeded, welding output will stop and an over-temperature warning light/error code will be displayed on the panel. **If a duty cycle event is registered, do not turn the unit off!** Allow the plasma cutter to continue to run at idle for at least 10-15 minutes until the temperature has fallen enough to reset the sensor and over-temperature warning light. *Even if the unit resets, allow the unit to cool for a full 15 minutes, or the duty cycle will be more quickly triggered since the unit resets just below the heat threshold.* ***The fan (s) must continue to run for a full 15 minutes to cool the unit properly after the duty cycle shut down has occurred.*** After 15 minutes of cooling, you may switch the unit off if you are finished welding. If the unit does not automatically reset after 15 minutes, turn the unit off. Wait for 15 seconds before turning the machine back on. If the unit does not reset, contact technical support for further advice and assistance. As a best practice, when you have completed welding and have been welding continuously for extended periods of time, keep your unit on for 10 additional minutes without welding to allow it to cool.

The intentional and/or repeated triggering of the duty cycle protection feature on this unit will shorten the lifespan of the unit's electronics and can weaken internal components. The effect of overheating your unit repeatedly takes a cumulative toll on the unit.

NOTICE: These units are tested by an international and independent certifying agency for their ability to sustain the claims of duty cycle, under lab induced conditions which are typically more stringent than average shop conditions.

DUTY CYCLE AND CNC USE

When considering this unit for use with CNC applications, keep in mind that CNC applications may require nearly a 100% duty cycle. For this reason, the unit should be used at or near the 100% Duty Cycle Amperage rating of the unit, and not at the full maximum amperage. See the specification chart for this rating. This does not mean the unit cannot be used at the maximum Amp rating of the unit (the 60% Duty cycle rating), but it does mean that special attention should be taken when cutting parts that may require over ten minutes of cut time to complete, or when rapidly cutting one part after the other at maximum settings, without sufficient cooling time between parts being cut.

Keep in mind that the 100% duty cycle Amp rating does not mean that this unit will cut continuously for an infinite period of time. The duty cycle is based on a clearly defined 10 minute window of time. For example, a 100% duty cycle does not mean the unit will cut continuously for 25 minutes without a rest for cooling. It only means it will cut up to 10 minutes at the rated amperage without having to rest a cool. This means that after the 10 minute time period has expired, the unit *may* overheat if the unit continues to cut without a rest. But in practical terms, though, when using at much lower amperage than the 100% rating, continuous or near continuous cutting may be possible in some circumstances. Additionally, ambient operating conditions and other factors such as cleanliness of the internal parts can affect the duty cycle positively or negatively. This unit regulates duty cycle by means of a thermo-sensor rather than a timer, so duty cycle may vary disproportionately at times, and is not a completely linear function.

Specifications

Breaker Sizing and Wiring Requirements

Before installation of this unit in any facility, always consult a licensed local electrician familiar with the requirements of properly wiring a plasma cutter into the electrical supply. Refer to the National Electric Code (NEC) and local codes. If needed, refer the electrician to Article 630 of the NEC during consultation to determine proper application and wiring needs. Use the I1MAX and the I1EFF ratings listed above to determine the proper breaker and conductor (wire) sizing required. Everlast plasma cutters are designed around use in industrial wiring applications and are intended to be used with modern electrical systems. Household wiring may need to be upgraded before this plasma cutter may be installed. Additional HF protection and isolation may be needed if this plasma cutter interferes with the operation of electrical/electronic equipment.

IMPORTANT: Do not modify plasma cutter wiring. This unit meets the standards for conductor sizing on the power cable and takes into account power cable length, duty cycle and rated current.

NOTICE:

If any electrical disturbance is noticed as a result of the high frequency interference that is possible with the operation of the inverter switching and operation, the HF service bolt should be connected directly to a 12 gauge wire that is bonded directly to an outside copper ground rod driven into moist soil. Additionally, all metal items including any metal frame or sheeting of the building should be connected and grounded to separate copper ground rods driven into the ground at 10 foot intervals around the perimeter of the building. This includes items such as tables, carts, rack material, metal surrounds, etc. that may act as "antenna" to radiate/absorb HF energy. Additionally, all cords and welding leads should be twisted together and run directly to the work without coils or excess cabling. Normally, this will not be required, but it is supplied in the case of any interference that may be observed. This is usually observed in older or non standard installations where grounding and ground isolation is a problem.

Setup Guide

Getting Started

UNPACK YOUR UNIT.

Upon arrival, you will need to completely unpack your unit, and check things over. This is a time sensitive matter. Do not delay or hold the plasma cutter unopened in the box. First, make sure the unit is opened from the top. Be careful with using knives and sharp objects so you won't cut cords and cables inside the boxes. Lay all items out and inspect them.

You should have the following in your box:
1. Plasma cutter.
2. Air-Regulator with built in water trap/particulate filter.
3. 200A Work Clamp (approx. 9.5 ft with cable).
4. Consumable Starter Kit for Plasma.
5. Torch. 62i: iPT 60, 82i: iPT80, 102i: iPT 100.

When you receive your package, inspect the unit for damage. Check for the presence and general condition of the accessories. Some slight rubbing or chaffing of some of the accessories may be present, but this is considered normal. Most notably, the torch may appear to be used or fired. This is because it has been live tested in the factory for proper operation before putting into the box. If any item is damaged or missing, please inform Everlast within 72 hours of product receipt. See pages 4 and 5 for more details. Assemble the front, middle and rear handles with the supplied screws. Do not overtighten the screws.



NOTICE:

The unit comes with a basic consumable starter kit, designed to get you only through a couple days of plasma cutting. You should have 5 (pipe/non-shielded) cutting tips and electrodes. You will need to purchase a more extensive kit soon after receiving and using your unit. If you don't order extra consumables soon after you receive this unit, you may run out more quickly than you expect. This kit contains stand-off type, non-shielded consumables that are sized for the maximum Amp operation of the unit are designed for stand-off cutting. Lower Amp operation, gouging or drag cutting will require the purchase of additional consumables (See torch parts page for amp ratings and sizes). *Additionally, some miscellaneous parts may be found together with the consumable kit which may include fasteners, extra fuses, and some items for the air regulator required for assembly.* If you think you are missing a needed part, check the consumable kit bag before calling Everlast for replacement.

POWER UP AND TEST YOUR UNIT.

You will need to fully test the unit as soon as possible. Within 72 hours after receipt of the unit, be sure to have every thing you need at hand to test the unit. Make sure the correct input power, wiring, and plug configuration is being used. Then, power up your machine without any accessories installed. Allow the unit to idle for 15 minutes. Check and observe operation of knobs, controls and buttons, cycling through each as required. Make sure the fan is running at full speed. After the test is completed, turn the unit off, connect the accessories, shielding gas (customer supplied) and conduct live testing of all the functions and features of the machine. For testing and cutting make sure work clamp is connected directly to the part being welded (work). Check for arc starting and stability. If problems are observed, contact Everlast. See page 5 for more information. ***NOTICE:*** *Cosmetic damage claims after 30 days will not be accepted, unless Everlast is contacted and informed of such delay and reason for such a required delay (i.e. Overseas in deployment).*

CHECK FOR AIR LEAKS.

Be sure to check for gas leaks before attempting to cut. Connect all the lines and tighten and recheck any related clamps, plugs and fittings. If you hear or suspect leaks, use warm, soapy water (or a dedicated leak testing solution available from welding suppliers) and spray on all rear external connections. If any leaks are present, bubbles will form around the area of the leak. Tighten any clamps or fittings found to be leaking. If the regulator is leaking, make sure the pressure is not more than 90 psi, and tighten the small screws on the regulator with a screw driver. If too much pressure is applied, the regulator may have blown internal and external O-rings. Check and remedy if the regulator persists leaking. If the problem cannot be remedied, or internal leak is suspected contact Everlast. **NOTICE:** A small drop in set pressure and operating pressure (while cutting) is normal. This does not indicate a leak. This drop should never be more than 4 to 5 psi and is usually less than 3 psi. Setting the unit one LED light over the target pressure will offset this drop and allow the unit to perform satisfactorily while cutting. If the pressure drops more than this, this usually indicates the supply hose is too long or too small for the length it is running before reaching the unit. Always keep the supply hose as short as possible.

DISTANCE YOUR PLASMA CUTTER FROM YOUR WORK.

As a best practice technique, be sure to locate your plasma cutter away from the immediate area you are welding. Sparks and debris thrown by the plasma cutting process can enter the unit and cause damage. Do not intentionally cut with the plasma cutter on the work station or in the immediate area of the cut. This includes any grinding or milling operations that may occur in the area. With CNC operation, keep the cutter out of the immediate area of the cut table. *Keep in mind the fan draws air in from the rear and exhausts out the front and the sides of the unit.*

GIVE YOUR PLASMA CUTTER SPACE TO COOL.

The plasma cutter needs room to cool itself. Place the unit in a place that will allow 18" from all sides to allow for proper cooling. The plasma cutter pulls air in from the rear, and pushes it through the unit's heat sinks to cool the electronics. The air is then exhausted through the front panel and side louvers of the unit. If any of sides is blocked or restricted, the duty cycle will be reduced, and overheating will occur, leading to possible damage if the restriction is severe enough. Never attempt to restrict air flow by attaching filters to the vents or by modifying your fans for "on demand" service.

Setup Guide

Getting Started

CONNECT YOUR UNIT TO THE OUTLET.

For all single phase only units (PowerPlasma 62i, PowerPlasma 82i) the unit has been shipped with a NEMA 6-50 power plug. This is the standard power plug in the North American market for single phase 240V welders and plasma cutters. There is no need to rewire or change the plug. This plug is the standard and meets both national and local codes. (See more information as to why below in the next section discussing wire color and selection for 240V 1 phase use.)

NOTICE:

There are special rules centered around wiring an outlet for service with a welding machine. The National Electric Code under Article 630 has developed specific regulations for wiring electrical service for welding equipment. These are different than for other types of service such as a stove or dryer in a household or even in a commercial application. You need to consult and/or employ a locally licensed electrician before installing this unit to make sure all national and local codes are followed. If you are not qualified to make these connections, don't. Everlast is in no way liable for any damages caused by improper connection of your plasma cutter. Your plasma cutter should be on a dedicated branch circuit not far from an electrical disconnect box. Importantly, it should not share circuits with other shop or household items. Do not attempt to "adapt" existing circuits because conductor (wire) colors are different for plasma cutters with 3 wire operation than for a dryer or range with 4 wire operation. (Unless adapting with an approved adapter when being powered with a "clean power" generator.) No neutral is used in a plasma cutter circuit. The white wire is a conductor in a single phase plasma cutter service. The red wire is not used. ***The input power cable conforms to North American standards for size, length, with consideration given to inrush amperage, rated amperage and duty cycle. Do not modify, or attempt to rewire your unit.***

For all versions of the PowerPlasma 100 (except early or special order single phase only 240V models) your unit has been shipped without a power plug. This is because it is either 1 phase/3 phase 240V input or 3 phase 480V output, and there is no one single plug to accommodate this type connection. For single phase use, its is recommended to purchase a NEMA 6-50P plug. This is the standard plug used for 240V 1 Phase plasma cutters in North America. For single phase 240V connection, select a three-wire NEMA 6-50 Receptacle for operation with this unit. (Other regions/countries vary). Please remember that a neutral is not used in welding and plasma cutting systems. This is because there is no requirement for a 120V circuit, which requires a neutral. 120V circuits are often found in home appliances, but industrial type products that do not use a 120V circuit for operation are not required by code to use a 4 prong outlet for single phase use.

For a dedicated 240V 1 phase circuit, the wire wires supplying power (the conductors and ground) are black, white and green. A red wire, which is traditionally the "hot" leg of power is not present in the three wire 240V wire circuit of a plasma cutter. For plasma cutters, from the panel box, the Black wire serves as L1(Hot), White serves as L2 (Hot) and Green serves as G (Ground). Red will not typically be used as a conductor (on a dedicated plasma cutter circuit). There is no need for a neutral, so white is used as the other "hot" conductor in this instance. It is recommended to either install the receptacle as close to the main panel as possible or install a subpanel cutoff as close as possible to the outlet and plasma cutter. Follow local code to determine best arrangement.

If you are using this unit in conjunction with a 240V air compressor, you must supply a separate, dedicated circuit for both. Do not share or piggy-back a circuit with this plasma cutter unit.

Standard Plug Configuration 1 Ph 240V 62i/82i

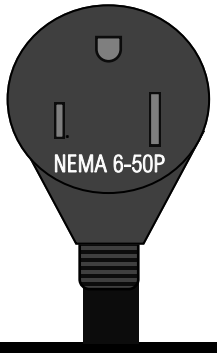

Wire Configuration 1 Ph 240V (102i)

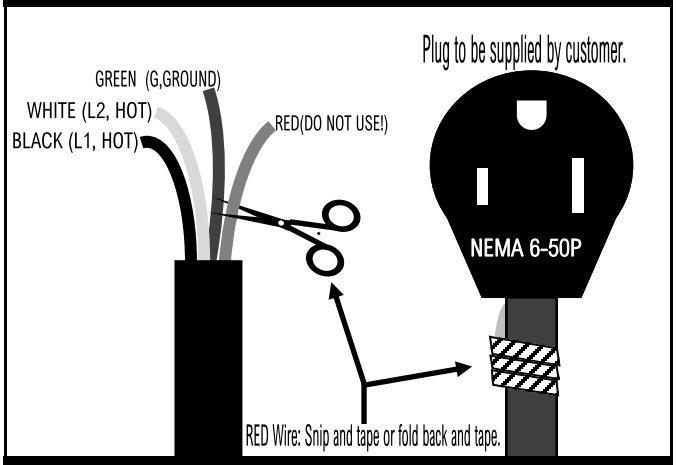

Wire Configuration 3 Phase 240V (Opt. 480V)

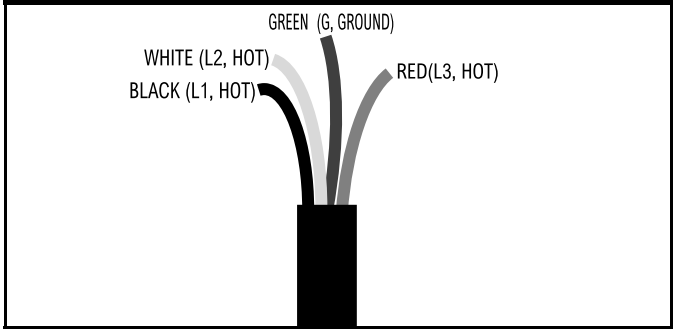

Setup Guide

Getting Started

CONNECT THE AIR COMPRESSOR

What do I need to be able to plasma cut?

The unit comes with everything you need as far as a basic starter kit for consumables, torch and regulator. However, you will need to supply a few things on your own.

1. You will need a suitable air-compressor and at least 3/8" supply line hose. 1/2" supply may be required for long distances. The input side on the regulator is the standard industrial 1/4" quick connect fitting. Suitable units should follow recommendations found in the product specification recommendations. Oiless and pancake compressors are not suitable.
2. You will need to be able to regulate your air at the air compressor. Do not use the pressure switch on the air compressor to control the air pressure. A gate or ball valve installed on the air compressor is not enough either. You will need an adjustable regulator which will control the air pressure at the tank. The regulator that you install on the unit is to be used to regulate actual cutting pressure. You need to be able to regulate the supply pressure down to 90PSI at the air-compressor. If you supply more than 100PSI to the cutter's regulator, you may damage the regulator.
3. You will need a separate air-dryer. Moisture is the enemy of any plasma system and destroys consumable life and eventually torches themselves. The regulator/filter included with the unit is not sufficient to remove moisture from the system. It is designed to trap particulates and slugs of water created by the coupling/decoupling process. A refrigerated system is not necessary. We recommend you look at the cartridge type systems that have replaceable elements for a budget alternative. If these are not available, consider at least having a replaceable paint gun dryer mounted inline and monitor the moisture it traps and replace it often.
4. You will need additional consumables with different sizes to match the cut Amperage. The stock consumables are designed for use at the maximum amperage of the machine. The orifice in the plasma tip is specifically designed for a range of Amps. To see that range, check the plasma torch pages of this manual, and each tip diameter corresponds to a specified amp range. Lowering air pressure to try to compensate for lower Amps results in poor quality cuts and inconsistent arc behavior. Always match the consumable size to the Amperage being used. **NOTICE:** *For direct on-the-metal drag cutting, gouging and CNC use, special shielded consumables are available for most of the Innotec® iPT series torches. Since Everlast does directly manufacture the plasma torches, every consumable configuration for every torch may not be stocked or available. For these or other special applications, consult OEM distributors of the iPT/PT/PTM series torches in the North American Markets.*

Connect Regulator To Cylinder And Unit.

NOTICE: Depending upon model, regulator may be mounted either on the rear or the side of the unit.

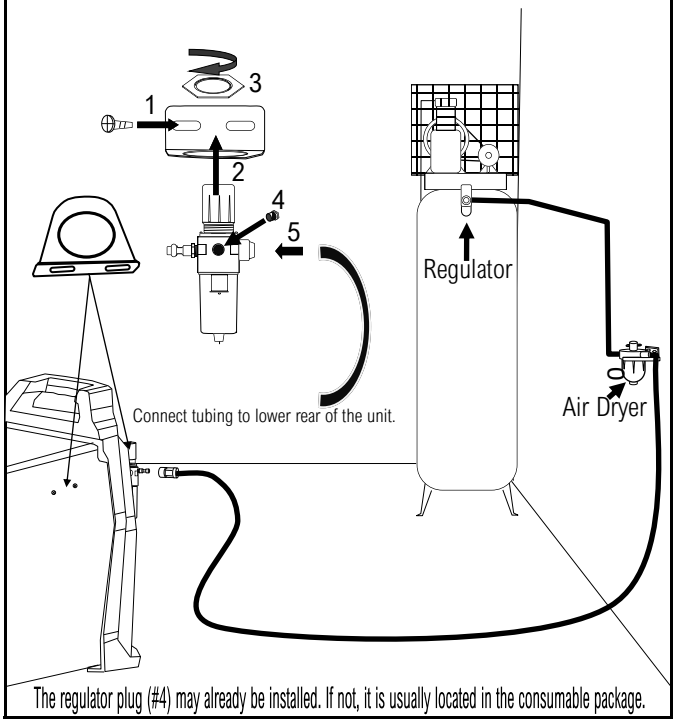

The regulator plug (#4) may already be installed. If not, it is usually located in the consumable package.

IMPORTANT:

Do not reverse air flow direction! Make sure the arrow stamped on top of the regulator coincides with the direction of air flow.

Setup Guide

Getting Started

The PowerPlasma series utilize a central torch connector. This connector is a "universal style" designed for rapid connection and easy removal for transportation or storage. The connectors feature pins which conducts power for the pilot arc and carries the torch switch activation and the "parts-in-place" signal for safety. These may be arranged differently from older models. When reordering torches, keep in mind that the pinout may have to be re-pinned to match current model year.

How Do I Connect The Hand Torch?

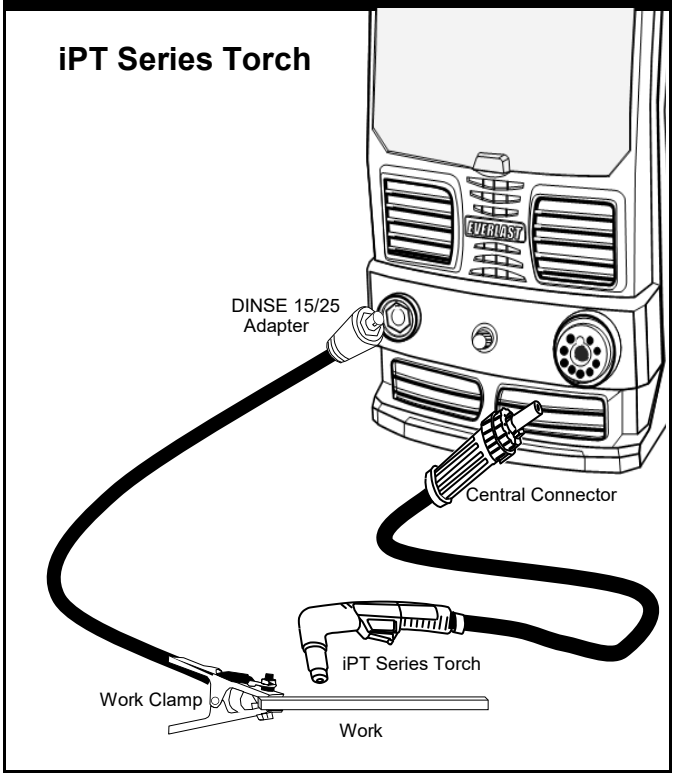

The standard unit is equipped with an Innotec iPT series torch. The torches support a wide range of amperages when the correct size and type of consumables are used.

When operating with CNC plasma tables, Everlast discourages the use of hand held torches, and recommends that the user purchase the optional machine torch. While Everlast does not outright prohibit their use with CNC systems, it should be noted that hand torches are more prone to wearing out prematurely and failure. While the consumables are the same between the hand torch and the machine torch, there are slight differences internally that make the machine torch more suitable like a slightly heavier spring used in the blow back start portion for longer life. Machine torches have straight sides which can be easily measured and squared. The hand torch has a slight angle and bevel to the torch head, which makes getting it truly perpendicular to the torch piece much more difficult. Even prefabricated adapters and hand torch holders are notorious for slipping or holding the torch at a angle other than a true 90°. While

Squaring the Machine Torch

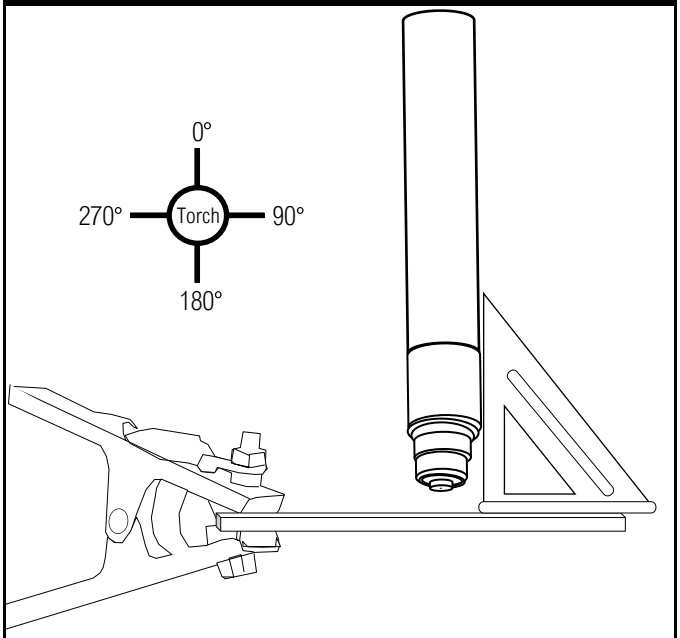

Square the torch on all four sides to ensure the torch and the plate are level. Check at every 90 °, all the way around the torch. Recheck all sides after any adjustment has been made.

squaring the machine torch, make sure that the plate is not warped by checking the torch on opposite sides first with a speed square or machinist's square. If one side reads square and the other side does not, then it is likely you have a warped plate, or loose holder. After checking the initial two opposing sides, rotate 90° clockwise around the torch circumference and check the torch for squareness in that direction. Then check the opposing side. Once square, check all sides again for squareness. If the torch needs a major adjustment in one direction, you will need to check the other direction for squareness, since adjustment with some torch holders allows movement in all directions.

Out of square torches cause a lot of issues with beveled cuts. If you notice a cut that is beveled in one direction of travel, you should suspect a warped plate, cutting deck or an out of square torch. *Slight bevels caused while cutting around circles are normal, but a change in direction of travel can change the amount of bevel and the direction of the bevel.*

WARNING:

When installing the machine (CNC) torch, make sure you do not over-tighten the holding bracket on the torch body. Overtightening the machine torch will cause the spring loaded plunger responsible for the blow back start to stick and cause issues with firing, or inconsistent operation. To check operation, turn off the unit and unplug it. Then remove the shielding cap (fiber cap), swirl ring and cutting tip. Then press up on the electrode with your thumb or finger. The electrode should move up about 1/8" with moderate pressure. When released the plunger mechanism should snap back. If this is absent, loosen the torch holder.

Component Identification and Explanation

Front Panel View

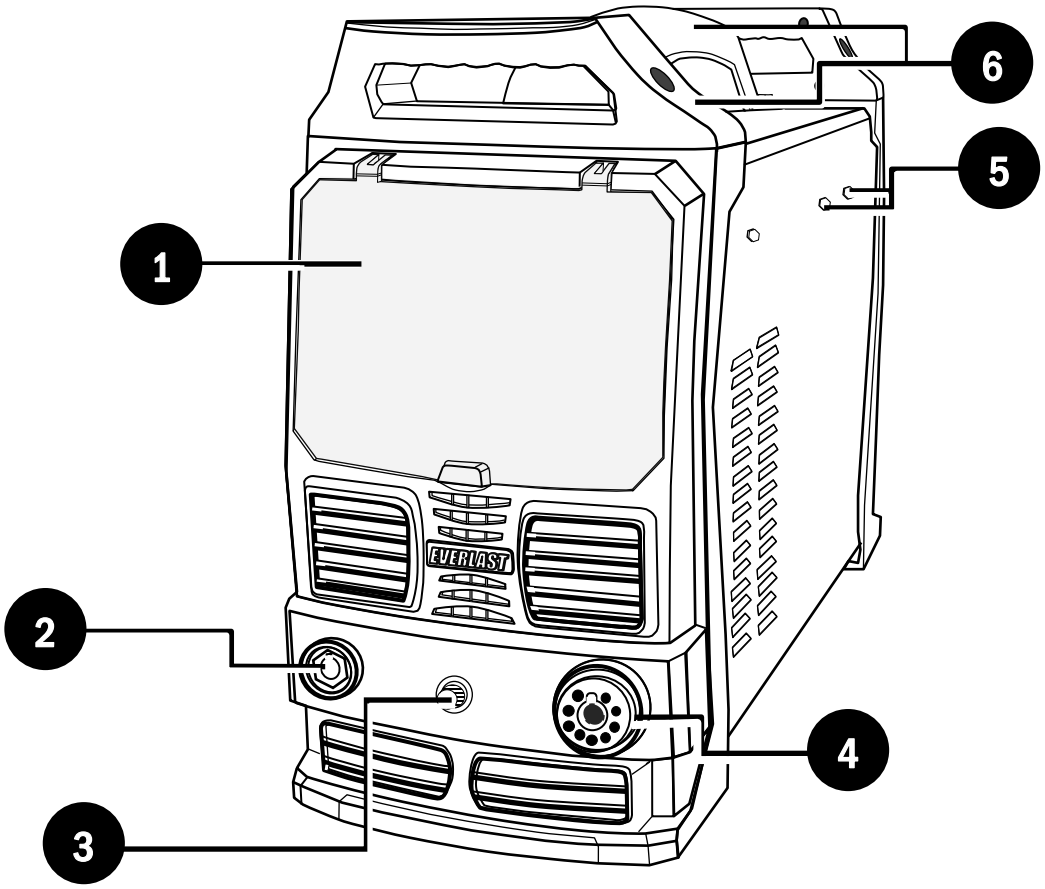

Number	Component Identification	Component Note
1	Protective Cover	Keep cover down and in place during welding activities and in storage.
2	Negative Terminal (-) (DINSE 15/25 Type, 3/8" nominal dia.)	Connect the work clamp to this terminal.
3	Fuse, Glass Automotive Type	Replace with same type. Amp rating and part number located on metal fuse end. Unscrew thumbscrew to access fuse. If fuse is stuck or holder is damaged, contact Everlast Support.
4	Euro Central Connector	Connect the torch to this connector. For details concerning pinout and torch compatibility, contact Everlast Support for more information.
7	Screws (paired set on side panel, near rear) to install air regulator bracket (Alternate installation location supplied in rear on some models. Requires extended bracket to use.)	Connect the argon regulator bracket to this location. On some models, there is an alternate location on the rear to use with the extended bracket. Remove screws, install bracket, then replace screws. Alternately, if equipped, install regulator bracket on rear where double screw holes are present. If using alternate location, use supplied bracket screws located in parts bag.
8	Handles	Assy. Required. The handles are temporarily removeable for low clearance applications. If operated with the handles removed, the screws should be reinstalled before operating or transporting

Component Identification and Explanation

Rear Panel View

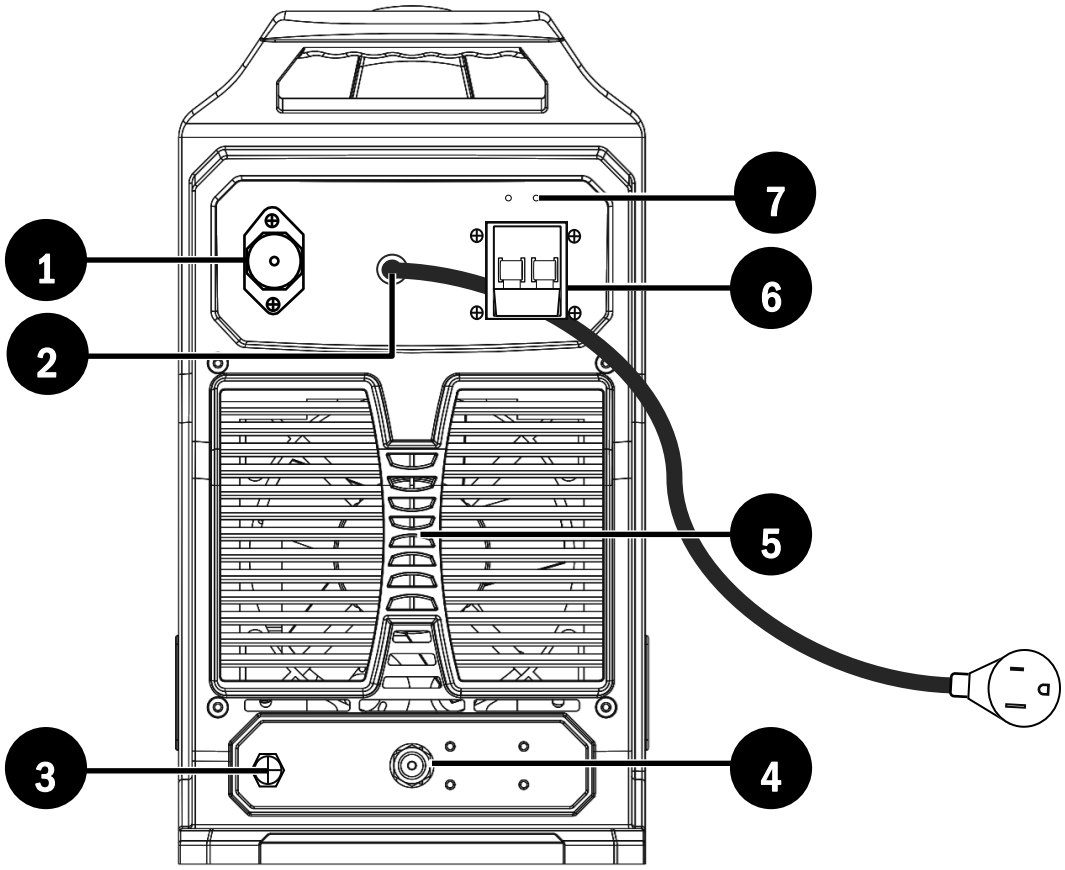

Number	Component Identification	Component Note
1	CNC Connector and Dust Cap	For use with CNC controllers. Locate and use the mated plug (supplied in CNC version packaging). Solder the mated plug pins directly to CNC control cable. Do not remove or re-pin CNC connector on the unit. Do not solder directly to the unit connector. If you do not have the accompanying plug that mates to the rear in the packaging for CNC cutters, contact Everlast.
2	Input Cable and Plug* NOTICE: Always consult national codes and a local licensed electrician before wiring this welder to any service.	***North America only:*** The unit may be operated on either 208-240V 1 phase (or on 120V 1 phase with the included pigtail adapter). North American standards require only 3 wires for 1 phase operation of welders. A neutral is not used or required. **For wiring a 1 phase connection to the unit:** Use Black for L1, White for L2, and Green for ground (not neutral) use. Red is not typically used in wiring a dedicated plasma cutter circuit. This is in accordance with North American codes for welder/plasma cutter wiring (see Article 630 of the NEC for more info). However, this presents a problem when wiring into old services where red may be present where a 4 wire system or older 3 wire is used with a neutral (white wire) and a ground (green wire). While a welder operates on 240V single phase, a Neutral is not used and the white and black wires are used as conductors for a dedicated welder circuit. If a red wire must be used as a conductor, then the black conductor should be matched to the black wire on the welder and the red conductor should be matched to the white wire on the welder. When operating on 120V, the white wire (internally) becomes the neutral, and the green still serves as the ground. *The supplied NEMA 6-50P is the proper plug used for wiring single phase 240V welders and plasma cutters in North America. It should not be changed or removed unless wiring directly into a cut-off switch. Other regions may vary and may have a different plug type or no plug at all.*
3	HF Ground Service Bolt**	For use in a combined effort to mitigate any electrical interference that may be caused by the operation of this unit.
4	Air input connector (from regulator)	Push-to-connect type connector. The tubing is routed from the regulator to this connection. The tubing is inserted firmly.
5	Fan location	Periodically check for proper fan function and cleanliness.
6	Breaker/Power Switch.	This switch doubles as the main power switch and disconnect switch. If this switch trips and the welder power turns off, a significant internal event or failure of the switch *may* have occurred. If this occurs, immediately remove from service and mark/tag according to regulations and contact Everlast Tech Support for further diagnosis and/or repair options.
7	Air Regulator Bracket Screw Holes (On some models. Not all models may have these screw holes. Exact location may vary.)	The air regulator bracket may be connected to this location. Alternately, the pair of screws (left side from this view) near the rear of the metal cover may be used to install the bracket. If no screw holes are present, then use the alternate location on the side to mount the air regulator bracket. If present, exact location may vary due to manufacturing changes and improvements.

Component Identification and Explanation

Control Panel Layout

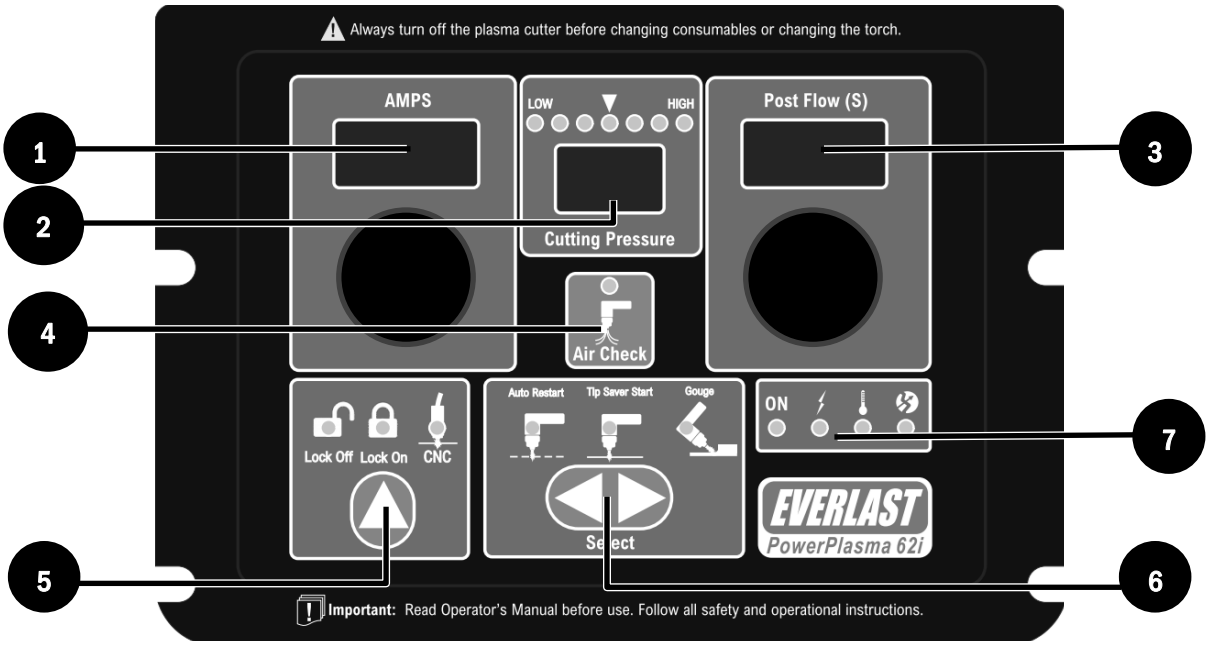

Number	Component I.D.	Value	Component Note
1	Amps	20-60/80/100	Use to set and control Amp output. While cutting, the amps are displayed dynamically (live).
2	Cutting Pressure	65-72 PSI (recommended)	This displays selected cutting pressure and indicates the ideal pressure for cutting. The center green LED indicates the target pressure, indicated by the center inverted arrow (▼). The farther away from the target pressure the unit is adjusted, the light colors will change to yellow and red. The pressure required will be different for cutting and gouging modes. If the pressure falls below the target pressure while cutting, increase pressure slightly so that the LED to the right of the arrow is lit. This will allow the target pressure to be correct while cutting. This happens when long lengths of hose, or undersized hose/plumbing is used to connect to the unit. If the hose is resized and shortened, the pressure drop will be less. Large variations in compressor cut-in/kickout pressures can also affect this. Make sure that you use an adequate size compressor as listed in the specification page. *If there is a significant loss of pressure between static and operating pressure, there may be an internal restriction to the pressure circuit or leak. More commonly the supply hose is too small for the length of run and amount of air consumption. Use a minimum of 3/8" air hose for lengths up to 25 ft.* Contact Everlast Support for assistance if needed.
3	Post Flow	10-60 Sec	**Post-Flow.** The post-flow adjustment adjusts the amount of time that air flows after the torch has finished cutting. This is important for extending your torch and consumable life by cooling it after the cut has terminated. The higher the amperage and the longer the unit cuts, the more post flow is required. As a rule of thumb, use an extra 1 to 2 seconds of post flow for every 10 amps over 20A. Longer post flow times may be used in cases where long, uninterrupted cuts are being performed.
4	Air Check		**Air Check.** This is used to set and adjust cutting air pressure. Select the button to open the solenoid without having to fire the torch. Adjust air pressure to the target pressure. The gas will continue to flow until the button is reselected. Do not use the torch trigger and post flow cycle to set the cutting air pressure.
5	Lock Off/On, CNC		**Lock Off/ On.** "Lock" refers to the trigger function. With the "Lock-off" selected press and hold the torch trigger to cut. The arc will stay on as long as the trigger is held down. This is the best method for short or detailed cutting. To use the "Lock-on" mode, press and release the torch trigger to start the cut. The arc will be on when the trigger is released. Press and release the torch trigger again to stop the cut and begin the post flow cycle. This can be used on long cuts with track torches or pipe beveling devices. **Warning!** ***Selecting Lock On can create a dangerous situation if the user is not alert and informed of its operation.*** When the CNC option is selected, this surrenders control of the unit to (and turns on) the CNC control socket.
6	Auto Restart		**Auto Restart.** In this mode, the pilot arc is designed to switch back on automatically if cut continuity is lost. Once continuity is regained, the cutting arc will re-energize and the pilot arc will shut off. This cycle will happen continuously as long as it is needed. Use this mode to cut expanded or rusty metal or in CNC mode. This mode results in more rapid wear of the consumables.
6b	Tip Saver Start		**Tip Saver Start.** In this mode the torch supplies the pilot arc for approximately 3 seconds before terminating the arc. This limits pilot arc on time and helps save consumables. Use this mode if you are hand cutting on long, continuous cuts. If the cut is lost, the torch must be retriggered to restart the cut, so CNC cuttingis not recommended with this engaged.
6c	Gouge Feature		**Gouge.** This feature is designed to quickly remove excess weld material or to correct defective welds or blemishes in metal. The torch is held at an shallow angle to the weld or area and the arc strikes the metal blowing a layer of metal away. The arc is less aggressive. Lower air pressure must be used along with large, special consumables (available separately from most OEM suppliers of the Innotec iPT series torch) designed for gouging. This unit is designed for light gouging only. See Specifications, page 10.
7	Information/Warning LEDs		**Information/Warning LED's.** The far left LED confirms that the unit is switched to On and remains lit continuously. The lightning symbol indicates an over/under current/voltage condition and is accompanied by error code E02. The thermometer symbol indicates that the unit has surpassed the duty cycle and has over heated and is accompanied by error code E01. (Allow the unit to run 15 minutes at idle until it cools before turning off or attempting to cut again.) The broken round symbol indicates there the torch cap is not in place or making adequate contact with the base. It is accompanied by error code E04. A stuck Switch or one that may be malfunctioning (being held closed too long without starting a cutting arc, i.e. pilot arc has been engaged too long) is indicated by error code E05. E06 Indicates operating air pressure is too low or too high. Use #2 above to set pressure. With any error code, the output will be interrupted until it is corrected. In some cases, the machine may need to be reset by turning it off and back on again.

Component Identification and Explanation

Plasma Cutter Function Important Information and Warnings:

DANGER! Never touch any of the bare portions of the torch power connectors, fuse, consumables or torch control while the unit is switched on and torch is connected. Severe injury or death may occur if the torch trigger is accidentally activated or becomes damaged.

WARNING! Do not use sun glasses or non cutting glasses to protect the eyes. Use at least a shade 8 for plasma cutting where the arc is clearly visible. Never use less than a shade 5, and only use that for situations where the arc is not visible. Do not use cutting shades rated only for Infrared use, such as those designed for Oxy-Fuel use. These usually do not offer sufficient UV protection unless stated otherwise.

CAUTION! Keep the torch switch isolated and the consumables in place on the torch while the unit is switched on. Turn the unit off to change consumables. Do not remove the trigger safety guard or attempt to defeat its operation in any manner. If the trigger safety becomes damaged, replace immediately. Turn the machine off to replace the consumables.

CAUTION! For most cutting applications, use the "Lock-Off" Setting. Do not use "Lock-On" unless you are familiar with its operation. Attempting to use this setting without being thoroughly familiar with this setting may cause a panic stop and can result in severe burns and injury. "Lock-On" is for only experienced users that intend to make long cuts. If you use "Lock-On", remember that the arc will stay on until the trigger is cycled again. Lock-Off is the simplest operation with a "press and hold" operation. "Lock-On" requires a "pull and release" to start the arc. The arc will continue without the trigger being held. The cut will continue until the trigger is pulled and released once again.

WARNING! Do not submerge the work clamp in water, particularly for use on CNC plasma tables. Always connect the clamp directly when possible, but the clamp should never be submerged in water, or the water may siphon down the cable through capillary action and run into the DINSE connector or the machine. If the work clamp cannot be safely attached to the work without submerging it, either lower the water level of the table, or use a thick copper jumper wire direct to the work clamp which is attached directly to the work clamp.

WARNING! A poor work clamp connection may cause faulty cutting, loss of cutting power, or excessive pilot arc engagement. The Pilot arc is not designed for continuous run and the length of its time on should be limited as much as possible. Even though the fuse may not blow if the pilot arc is left on continuously or is being used excessively, the fuse holder may overheat or become damaged. If poor cutting is experienced, with minimal penetration into the cut, the pilot arc may be staying engaged. Check the work clamp and cable for proper connection. If necessary, change the work clamp if the copper cable and strap have burned or looks corroded.

STOP!

If the pilot arc does not appear to transfer, particularly when being used on CNC cut tables stop immediately, and investigate the cause. Usually this is a result of a poor work clamp connection, or too high of a cut height. Do not allow the pilot arc to remain on continuously. To do so will increase consumable wear greatly, or overheat the pilot arc circuit.

NOTICE:

The design of the blow back start ***may*** cause a slight delay in the arc as the air pressure must built inside the torch tubing and head to create the pressure needed to force the electrode off the nozzle seat. This may take up to a second, especially when using longer torches or marginal air supply systems. Restarting the arc in tip saver mode requires retriggering the torch. If the torch does not light after 3 seconds, let go of the trigger and press it again. If the start or arc is erratic check nozzle and electrode for tightness and wear.

Component Identification and Explanation

Explanation of Functions and Plasma Cutting Terms

What Air Pressure do I use to cut?

The unit should maintain between 65 and 72 PSI while actively cutting. Use the air pressure target LED's to set your pressure while the gas is flowing. Do not lower the air pressure in an attempt to improve cut at lower Amps with oversize consumables. Consumable size should always be matched to the Amp range being used to cut. Lower Amps call for smaller diameter orifices in the consumables. See the torch page and the parts information to match consumable size to the Amp range of the consumable. Using too little air pressure will rapidly accelerate wear on all torch parts and consumables. Using too high of amperage for the consumable will rapidly wear the consumable. For best results, buy a complete range of sizes of consumables to be able to tailor your cut needs.

Bevel. When plasma cutting a certain amount of bevel will be present. The cut will rarely be a true 90 degree cut. Usually 1 to 7 degrees of bevel may be present on the "keep" side. Ideally this figure is under 5 degrees of bevel. One side of the cut will have more bevel than the other. Measure the "keep" side of the bevel. Practice cut with your torch first before attempting precision requiring cuts to familiarize yourself with which side of the cut the bevel is being formed on. With the iPT60 torch the inside swirl ring can be flipped over to change the bevel side. If circle cutting, be sure you have identified the direction of bevel. Changing "clock" rotation of the torch in a circle cut will change the side of the bevel. See the instructions on circle cutting in this manual.

Blow Back Start. There are three common types of start that can be attributed to how the plasma arc is started or maintained. Two of the three are no longer used in more modern plasma cutting systems. These two are: Contact start and High Frequency start. Contact start simply means the torch must be touched to the metal and drug along to maintain an arc. High Frequency start uses points similar/same as the TIG process to create a small arc, or spark to start the arc without the torch needing to maintain contact or touch down to start. HF start with pilot arc operation causes a lot of electrical interference. The final type of start, is used in most modern plasma cuttings system. This is the Blow-back Start. In a Blow-back start torch design, when no gas is flowing and the torch is not in use, the electrode and tip rest in contact with each other, creating a closed circuit. When the torch is triggered, either a spring loaded "piston" or a specially designed spring loaded cartridge uses air pressure to drive the electrode rearward away from being in contact with the cutting tip, creating a small "Pilot Spark" energizing the pilot arc. This unit uses the modern "Blow-back" start style. For more information, see how the arc starts in the illustration located on the torch page.

Dross. Dross is the left-over oxidized metal created by the Plasma cutting arc. In an ideal cut, little or no dross will be left, as it is cleanly dispersed out the bottom of the cut. Generally, though some slight dross will be present. Dross is sometimes referred to as "slag" by people who are mostly accustomed to stick welding or cutting with oxy-fuel processes. The amount of and type of dross created is affected by torch cut height, cut speed, air pressure, consumable size and even torch angle. Two types of dross are generally present: Hard and Soft. See the instructions later in the manual to identify the type and cause of different types of dross.

Edge Start Cut. When the plasma torch reaches the upper limit of the cut capacity, piercing starts are no longer viable. Usually this is anywhere from 1/2 to 2/3 of the torch rated capacity. Cutting can still be performed, but starting a cut in the middle of the metal is no longer an option. If piercing starts are attempted near the maximum capacity of the machine, wear will greatly accelerate on all torch consumables and even the torch itself. In fact a poorly performed pierce start will completely destroy the consumable set in one cut if the pierce is performed at or near the maximum capacity of the cutter. An edge start allows the torch to be placed on the very edge of the plate to be cut to start the arc. The arc actually lights right on the edge of the metal, and the torch is brought into the metal and the cut begins. A lead in is usually used to create the cut.

Kerf. Kerf is the width of the cut. Kerf will vary according to the consumable orifice size used, the stand off height, and to a lesser extent, cut speed. Kerf width is important to maintaining cut accuracy. Testing kerf width first is advised before trying to perform cuts which need a high level of accuracy. Always remember to adjust for the kerf width. Smaller kerfs can be achieved by using smaller diameter cutting tips, but cut thickness will be limited.

Lead-In/Lead Out. Lead ins or Lead Outs are simply cuts that are made at the beginning or end of the cut that will not be used in the final part being cut. These are usually tangential to circles or start outside of the part shape and travel into or out of the cut. This is done to prevent "blow out" of the kerf width and discontinuities where the torch starts/stops.

Pierce Start Cut. When the plasma cutter is sized properly and is used in an average, daily cut, the unit will not be at the all-out maximum capacity of the machine. In this case, the torch will use the pilot arc to start the arc and will begin to pierce a hole through the metal to start the cut. Of course, if desired the pierce can happen anywhere on the metal. When hand cutting, the piercing limit can be increased by starting the cut at a slight angle to keep the sparks and molten metal for bouncing back onto the torch head, and damaging it. Once the piercing begins and the cut begins to develop, the torch can then be slowly stood fully vertical to cut as the flame begins to exit the bottom of the cut.

Problem: I just changed my consumables now my torch won't light/or the arc is blowing out my tip. What's wrong?

Did you just change your consumables? Or did someone do it for you? All iPT torches use a swirl ring. This swirl ring is used to help create the torch arc, and confine it. It is a small brown/orange high temperature plastic piece shaped like a donut with several pin holes in the side directly under the cutting tip. Sometimes it'll stick lightly to the old cutting tip, or may even be dropped, unnoticed during the change. It is lightweight, and the color may blend in with the color of the copper cutting tip. This swirl ring is rarely replaced, but must be checked for its presence before reinstalling the consumables or it can damage the torch head and cause extreme malfunction. Occasional wild or random starts with poor arc may be present.

Problem: I can touch my torch to the surface and cut, but I don't get a pilot arc when I pull the trigger.

Check your fuse. The Pilot arc is served by this fuse. The fact you can touch the torch to the metal and still cut indicates the pilot arc is not functioning, but the cutting arc is still working ok.

Component Identification and Explanation

How do I edge start a plasma cut?

Edge starts are the best type of start to promote consumable and torch life. This reduces blow back of molten material and allows a smooth gradual start of the arc and maximizes cutting capacity.

1) Line up the hole on the tip of the electrode on the edge of the cut. Hold torch perpendicular to the cut initially, about 1/16" off the metal. Slide the yellow safety lock and squeeze the trigger. Wait for arc to start.
2) Once the arc starts, wait for the arc to penetrate all the way through the metal.
3) As the torch penetrates the flame all the way through the metal, tilt the torch so there is a slight lead in the flame if metal is thin. If the metal being cut is thick, keep holding torch in a nearly vertical position.
4) Begin moving the torch in the direction of the cut. Maintain 1/16" to 1/8" standoff height.
5) Move the torch fast enough so the sparks and flame trail from the bottom edge at an angle of no more than 30° and no less than 10° from perpendicular to the metal. Excess angle of sparks/flame indicate too fast of travel speed or practical cut capacity has been reached. Little or no angle indicates too slow of travel speed.

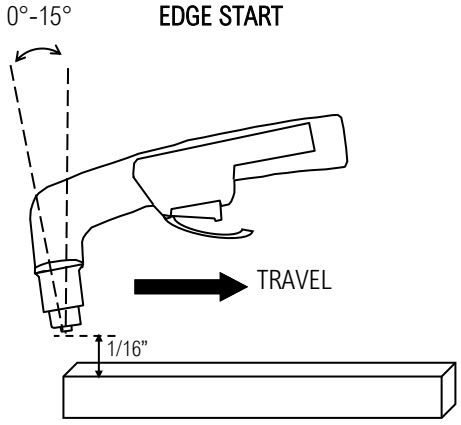

How do I pierce start a plasma cut?

Piercing starts often result in rapid consumable wear and excess blow back of molten metal deposited onto torch and consumables. This should be done only as necessary on thicker material.

1) Tilt the torch in the direction of travel or toward the side of the metal to be discarded or wasted at a 40° to 60° angle. Slide the yellow safety lock and squeeze the trigger. Wait for arc to start.
2) Once the arc starts, wait for the arc to transfer from pilot arc to the cutting arc.
3) As the flame penetrates through the metal (at a sloped angle) rotate the torch slowly to the vertical position. Tilt the torch from 0°-15° for thin metal cuts, or hold it nearly perpendicular for thicker metal cuts.
4) Begin moving the torch in the direction of the cut. Maintain 1/16" standoff height.
5) Move the torch fast enough so the sparks and flame trail from the bottom edge at an angle of no more than 30° and no less than 10° from perpendicular to the metal. Excess angle of sparks/flame indicate too fast of travel speed or practical cut capacity has been reached. Little or no angle indicates too slow of travel speed.

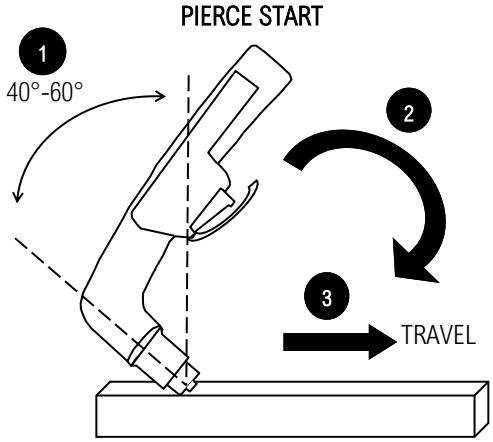

IMPORTANT:

If you use a standoff guide with the torch, it must be adjusted to provide no more than 1/8" standoff, less if possible. Long standoff heights reduce cut capacity and quality. It also promotes rapid consumable wear and can prevent the pilot arc from transferring.

Component Identification and Explanation

How often should I check or change consumables?

Check consumables regularly for wear and change them out before they are completely worn out. A good practice is to check consumables before turning the machine on each time you prepare to cut. It takes only a few seconds and can save yourself a lot of extra effort later. Allowing the consumables to wear until they quit working may damage torch related components, creating a more costly repair. If the cut quality suddenly deteriorates and begins to show greater than 5 degrees bevel, stop and check the consumables for wear. Inspect the cut tip orifice for the tell-tale signs of wear including deep pitting around the orifice and an egg shaped hole. The electrode should be inspected for wear as well at this time. The cap should be pulled off, along with the tip and the swirl ring. The tip should be examined for wear. A slight pit is normal in the center of the electrode. However, if the electrode tip is pitted around the center, or the center has a deep hole in it, the tip is worn. The very center of the electrode has a special insert made of hafnium. Hafnium is an expensive and durable metal that is used for electrodes. If the hafnium insert is wearing quickly, check for water or moisture getting into the system. Also, periodically, with the unit turned off, check the spring action of the electrode by removing the cup and tip and pushing your thumb or finger down on the electrode. The electrode should depress slightly and spring back quickly without a delay. If it does not, the torch head may need to be disassembled, cleaned and lightly lubricated with di-electric grease. In some cases the sealing O-rings may be broken or dirty causing sticking. Replacement torch head kits are available if repair is not an option. Sticking of the electrode like this causes starting issues. Most often this condition occurs because of moisture and dirt that makes it way into the system. **Additionally, do not overtighten the electrode or overheat the torch (by poor cutting techniques such as excessive piercing starts on thick metal) or the electrode threads may gall in the torch head and break off during removal. Do not under tighten it either. Use the supplied wrench to tighten the electrode. Use your fingers only to tighten with this wrench. Avoid using pliers to install and remove the consumables.** This usually occurs on lower quality consumables (non-OEM) with poor chrome plating, but can occur if OEM consumables are overtightened.

NOTICE:

When lowering amps to cut thinner material, you must change to smaller orifice nozzle. Nozzles are offered in different sizes which are made for different amp levels. **See the torch parts page for amp range and size of consumables.** Everlast offers OEM size and configuration of consumables originally supplied with the torch for replacements and do not offer all configurations or sizes.

Everlast is not the manufacturer of the Innotec iPT series torches and does not offer all possible consumable types available for the torch series. OEM suppliers of the Innotec iPT torches (local and online) offer extended range of sizes and configurations. If drag cutting is desired, shielded drag consumables are now available from several online sources. *.An orifice that is too large for the amps being used will result in arc instability and a rough cut.*

What should the torch flame look like?

The torch flame angle can tell you if you are cutting at the correct speed or not. Take a look at the examples below to help you determine if you are cutting at the correct speed.

FLAME AT CORRECT TRAVEL SPEED

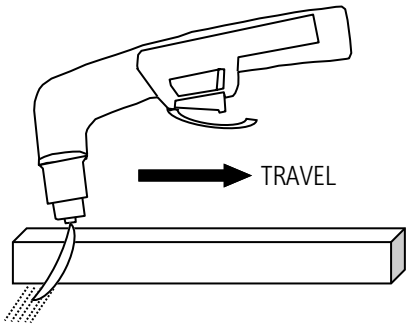

FLAME AT FAST TRAVEL SPEED

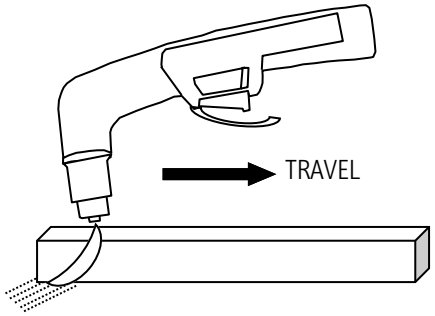

FLAME AT SLOW TRAVEL SPEED

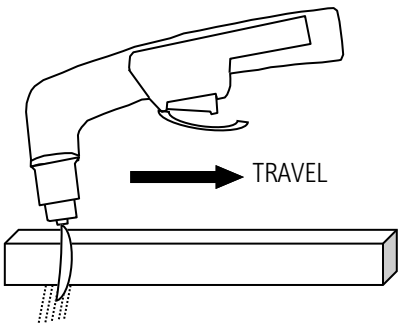

Component Identification and Explanation

What kind of dross am I seeing?

Dross identification can help you determine what is wrong with your cuts. Use the guide below to help you improve your cut quality.

RESULTS OF CUT AT CORRECT SPEED, AIR PRESSURE AND TORCH ANGLE

SMOOTH, EVEN CUT LINES WITH A REARWARD SWEEP

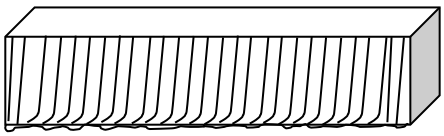

MINIMAL EASY TO CLEAN DROSS

RESULTS OF CUT AT SLOW SPEED

VERTICAL CUT LINES



SIGNIFICANT SOFT, POROUS DROSS

RESULTS OF CUT AT FAST SPEED

ROUGH, DISTINCT CUT LINES SPACED FAR APART

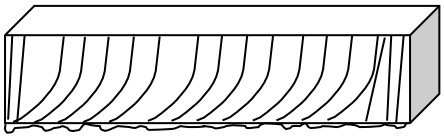

NOTICEABLE SMALL, HARD DROSS

RESULTS OF TOO MUCH STANDOFF OR WORN CONSUMABLES

TOP DROSS, SLIGHT BEVELING AT TOP

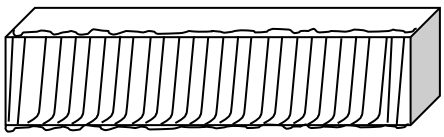

What other problems am I like to encounter?

Frequently, more than one problem may exist. Closely evaluating all issues can help narrow down cutting problems. Examine the cut for these additional issues to help you track down cut problems.

RESULTS OF TOO MUCH CURRENT OR TOO MUCH STAND OFF HEIGHT

(END VIEW)

MELTED TOP EDGE

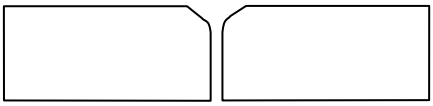

RESULTS OF WORN CONSUMABLE OR LOW AIR PRESSURE OR OUT OF SQUARE TORCH

(END VIEW)

SEVERLY ANGLED CUT AT TOP

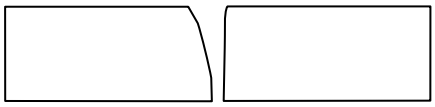

Component Identification and Explanation

How Do I Use a Lead-in?

When cutting an object, particularly a pattern shape, where the torch must pierce or re-fire in-line at an intersection of a cut, a lead-in cut should be employed. A lead-in is a cut that is made in the disposable part (also known as a drop) of the object to "lead" into the main part of the cut so that the destructive force of the arc is not directed into the desirable side of the cut itself. Also, all plasma cutters exhibit some angularity or bevel in the cut which is greater on one side than the other. Keep this in mind (and the direction you cut) when cutting an object to size so that too much metal is not accidentally removed and the object can be finished to the proper size.

AN EXAMPLE OF CUTTING A LEAD-IN WHEN CUTTING OUT A DISK SHAPED OBJECT

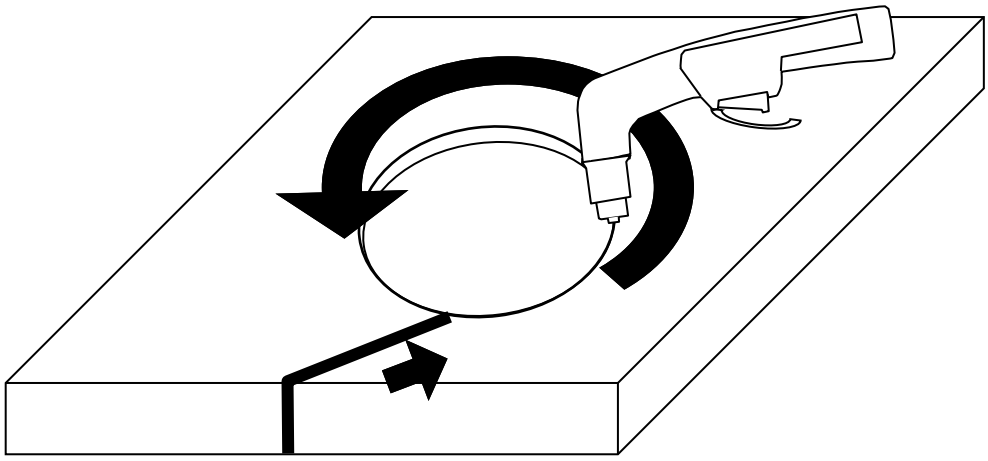

AN EXAMPLE OF CUTTING A LEAD-IN WHEN CUTTING HOLE IN AN OBJECT

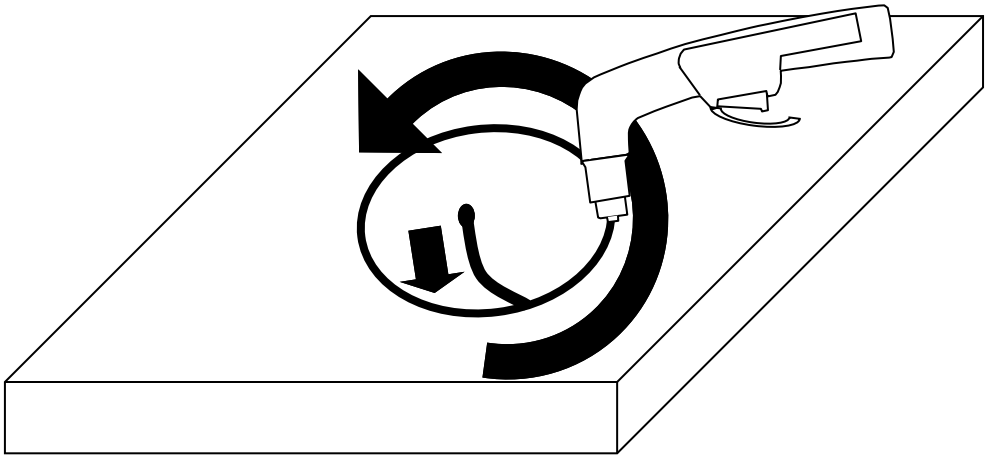

What is Kerf?

When you make a cut, a certain amount of material is removed from the cut. This is known as the kerf. In plasma cutting, knowing the width of the kerf is important to making accurate cuts. A typical kerf width from a plasma cutter will range from .045" to .090". The actual width of the kerf is affected by the orifice diameter in the consumable tip and by the cut height of the torch, and to some extent the thickness of the metal. Of course the best way to determine kerf width is to make a test cut and measure it. But if you are trying to achieve a narrow kerf width in thick plate metal, you will be limited by the fact that you will need a larger orifice to support the greater amperage needed to make a clean cut. Of course, you should always match the Amperage range to the orifice diameter. Lowering Amperage too low with a large consumable will result in arc instability and sputtering. A higher amperage consumable has a wider orifice width to support the increase in the Amperage. If the consumable size isn't increased, the higher Amperage arc will quickly "blow" its way to a wider orifice, which will lead to instability in the arc and a decrease in cut capacity since the hole is usually oblong instead of round at that point. Going with a larger diameter orifice on sheet metal means that while the cut can be performed more quickly, the kerf tolerance must be increased and figured into the cut plans. Cutting to slowly with a larger diameter consumable on thin metals will possibly yield an irregular kerf width, and "melt back", where the metal and the dross melt back and close over the area just cut. If you have no choice but to cut thin material with a wider consumable,

Component Identification and Explanation

IPT60

RoHS CE EN 60974-7

WITHOUT HIGH FREQUENCY
非高频

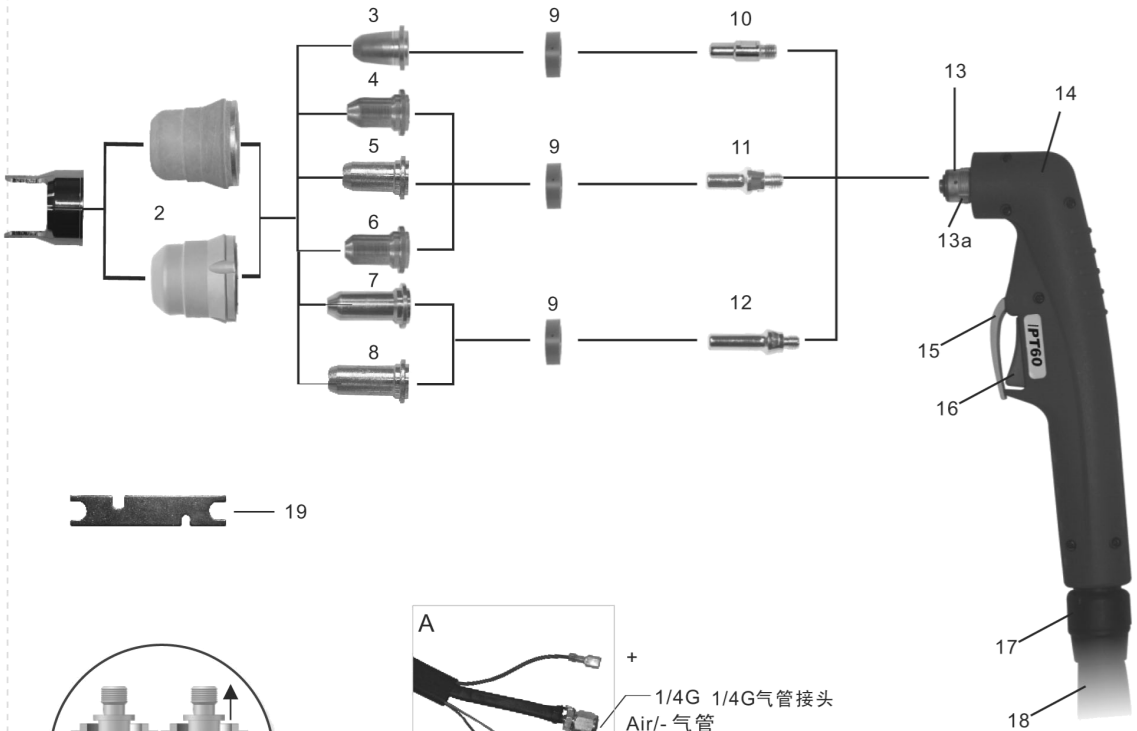

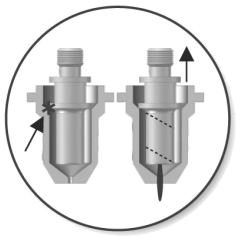

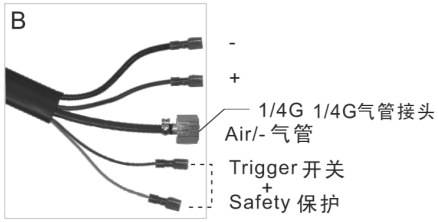



For the correct operation please use:
3-Ways Solenoid Valve,
inside orefic 2.3-2.7mm

Technical Data 技术参数	
Current 额定电流	60Amp
Duty Cycle 占载率	60%
Gas 气体	Air/N_2 空气/氮气
Gas Pressure 气压	4.4–5.0 Bar
Gas Flow 气流量	110 LPM
Ignition 引弧方式	Without HF 非高频
Post Flow 气体延时	55 sec. recommended 推荐55秒
Standard Length 标准长度	6M

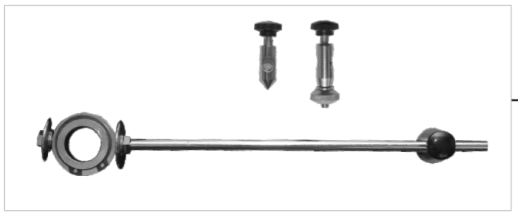

Component Identification and Explanation

IPT60

EN 60974-7

Complete Torch

	Code	Ref	Description
A	IVT0847		Plasma torch IPT60/6m 1/4G 等离子切割枪/IPT60/6m 1/4G
A	IVT0847-01		Plasma torch IPT60/6m 1/4G back striking 等离子切割枪/IPT60/6m 1/4G/后引弧
B	IVT0848		Plasma torch IPT60/6m 1/4G seperated 等离子切割枪/IPT60/6m 1/4G/气电分离
B	IVT0848-01		Plasma torch IPT60/6m 1/4G back striking 等离子切割枪/IPT60/6m 1/4G/后引弧

	Code	Ref	Description
C	IVT0846		Plasma torch IPT60/6m central adaptor 等离子切割枪/IPT60/6m/中央插头
C	IVT0846-01		Plasma torch IPT60/6m central adaptor back striking 等离子切割枪/IPT60/6m/中央插头/后引弧

Position	Code	Ref	Description
1	ISM0098		Double pointed spacer/IPT60;两点支架/IPT60
2			Outside nozzle;外喷嘴
2.1	IVS0661	PC0116	Outside nozzle 6 holes;外喷嘴/6孔
2.2	IVS0663		Outside nozzle 6 holes/maximum life;外喷嘴/6孔/长寿命
3			Tip;喷嘴
3.1	IVU0661-06	PD0116-06	Tip Φ 0.6mm/10-20A IPT25-60;电极喷嘴 Φ 0.6mm/IPT25-60/10-20A
3.2	IVU0661-08	PD0116-08	Tip Φ 0.8mm/20-30A IPT25-60;电极喷嘴 Φ 0.8mm/IPT25-60/20-30A
3.3	IVU0661-09	PD0116-09	Tip Φ 0.9mm/30-40A IPT25-60;电极喷嘴 Φ 0.9mm/IPT25-60/30-40A
4			Tip;喷嘴
4.1	IVU0660-06		Tip Φ 0.6mm/10-20A /back striking;电极喷嘴 Φ 0.6mm/10-20A /后引弧
4.2	IVU0660-08		Tip Φ 0.8mm/20-30A/back striking;电极喷嘴 Φ 0.8mm/20-30A/后引弧
4.3	IVU0660-09		Tip Φ 0.9mm/30-40A/back striking;电极喷嘴 Φ 0.9mm/30-40A/后引弧
4.4	IVU0660-10		Tip Φ 1.0mm/40-50A/back striking;电极喷嘴 Φ 1.0mm/40-50A/后引弧
5	IVU0668-09		Tip Φ 0.9mm/IPT60 /back striking;电极喷嘴 Φ 0.9mm/IPT60/后引弧
6			Tip;喷嘴
6.1	IVU0668-10		Flat tip Φ 1.0mm/40-50A /back striking;扁平电极喷嘴 Φ 1.0mm/40-50A/后引弧
6.2	IVU0668-11		Flat tip Φ 1.1mm/50-60A /back striking;扁平电极喷嘴 Φ 1.1mm/50-60A/后引弧
7			Tip;喷嘴
7.1	IVU0609-06		Extended tip Φ 0.6mm/10-20A/back striking;加长电极喷嘴 Φ 0.6mm/10-20A/后引弧
7.2	IVU0609-08		Extended tip Φ 0.8mm/20-30A/back striking;加长电极喷嘴 Φ 0.8mm/20-30A/后引弧
8	IVU0603-09		Extended tip Φ 0.9mm/30-40A/back striking;加长电极喷嘴 Φ 0.9mm/30-40A/后引弧
9	IVF0601	PE0106	Diffuser IPT25-60;分流器 IPT25-60
10	IVB0660	PR0110	Electrode Plasma IPT25-60;等离子电极 IPT25-60
11	IVB0048		Electrode Plasma IPT25-60 back striking;等离子电极 IPT25-60/后引弧
12	IVB0049		Extended electrode Plasma IPT25-60 back striking;加长等离子电极 IPT25-60/后引弧
13	IVZ0673		Plasma torch head IPT60;等离子枪头 IPT60
13a	IFT0709		"O"ring Φ 18x15mm;O型圈 Φ 18x15mm
14	IGV0038		Plasma handle manual/IPT20-60/Red;等离子手工手柄/IPT20-60/红色
15	IHJ0722		Protection part/Plasma/Yellow;开关保护档片/等离子用/黄色
16	IHQ0070	185.0031	Trigger;开关
17	IHJ0898		Joint/small/new type;球节套件/小/新式
18			Cable assembly;电缆组
18.1	IVN0806		Cable assembly/IPT60/6m 1/4G separated;电缆组/IPT60/6m 1/4G/气电分离
18.2	IVN0807		Cable assembly/IPT60/6m central adaptor;电缆组/IPT60/6m/中央插头
18.3	IVN0808		Cable assembly/IPT60/6m 1/4G;电缆组/IPT60/6m 1/4G
19	ICG6006		Spanner for Plasma;等离子枪扳手
20	IZX0078	FY0023	Central adaptor torch side Plasma 5 pins;等离子中央插头/5针
21	ISM0707		Circle cutting attachment;圆周切割附件

Component Identification and Explanation

IPT80/IPTM80

EN 60974-7

WITHOUT HIGH FREQUENCY
非高频

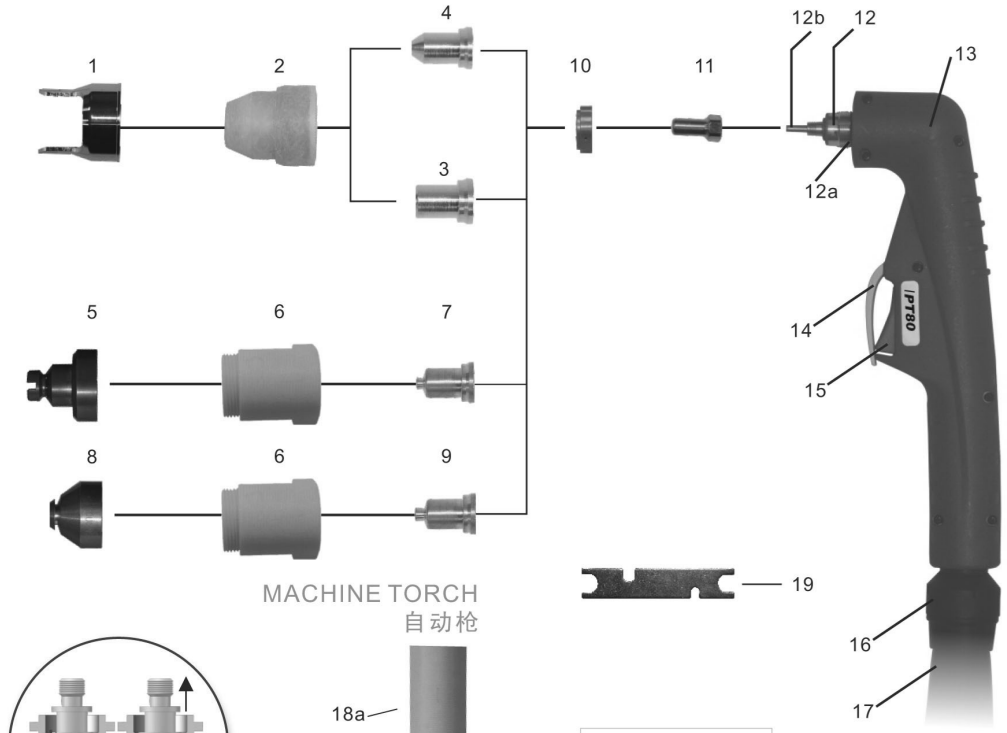

MACHINE TORCH
自动枪

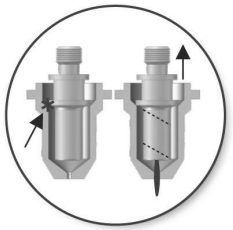



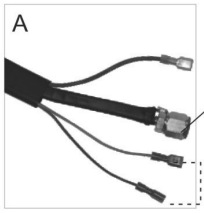

For the correct operation please use:
3-Ways Solenoid Valve,
inside orefic 2.7-3.0mm

Central adaptor
中央插头



Technical Data	技术参数
Current 额定电流	80Amp
Duty Cycle 占载率	60%
Gas 气体	Air/N_2 空气/氮气
Gas Pressure 气压	4.4–5.0 Bar
Gas Flow 气流量	110 LPM
Ignition 引弧方式	Without HF 非高频
Post Flow 气体延时	80 sec. recommended 推荐80秒
Standard Length 标准长度	6M

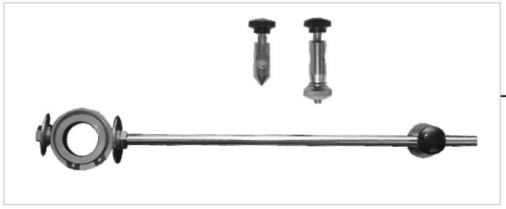

Component Identification and Explanation

IPT80/IPTM80

EN 60974-7

HAND TORCH

	Code	Ref	Description
A	IVT0911		Plasma torch IPT80/12m 1/4G/back striking;等离子切割枪/IPT80/12m/ 1/4G/后引弧
A	IVT0916		Plasma torch IPT80/6m 1/4G/back striking;等离子切割枪/IPT80/6m/ 1/4G/后引弧
B	IVT0912		Plasma torch IPT80/12m central adaptor/back striking;等离子切割枪/IPT80/6m/后引弧/中央插头
B	IVT0917		Plasma torch IPT80/6m central adaptor/back striking;等离子切割枪/IPT80/6m/中央插头/后引弧

MACHINE TORCH

	Code	Ref	Description
A	IVT0921		Plasma auto torch IPTM80/12m 1/4G/back striking;等离子自动切割枪/IPTM80/12m/ 1/4G/后引弧
A	IVT0926		Plasma auto torch IPTM80/6m 1/4G/back striking;等离子自动切割枪/IPTM80/6m/ 1/4G/后引弧
B	IVT0922		Plasma auto torch IPTM80/12m central adaptor/back striking;等离子自动切割枪/IPTM80/12m/后引弧/中央插头
B	IVT0927		Plasma auto torch IPTM80/6m central adaptor/back striking;等离子自动切割枪/IPTM80/6m/后引弧/中央插头

Position	Code	Ref	Description
1	ISM0089		Double pointed spacer/IPT80;两点支架 IPT80
2	IVS0667		Outside nozzle IPT80;外喷嘴 IPT80
2.1	IVS0667-01		Outside nozzle/maximum life PT80;外喷嘴/长寿命 PT80
3	IVU0671-09	51310.09	Tip Φ 0.9mm/30-40A /back striking;喷嘴 Φ0.9mm/30-40A /后引弧
4			Tip;喷嘴
4.1	IVU0670-10	51311.10	Tip Φ 1.0mm/40-50A /back striking;喷嘴 Φ 1.0mm/40-50A /后引弧
4.2	IVU0670-11	51311.11	Tip Φ 1.1mm/50-60A /back striking;喷嘴 Φ 1.1mm/50-60A /后引弧
4.3	IVU0670-12	51311.12	Tip Φ 1.2mm/60-70A /back striking;喷嘴 Φ 1.2mm/60-70A /后引弧
4.4	IVU0670-13	51311.13	Tip Φ 1.3mm/70-80A /back striking;喷嘴 Φ 1.3mm/70-80A /后引弧
5	ISM0700		Shield cap hand, 40-70A;隔离保护帽手工/40-70A
6	IVS0672		Outside nozzle IPT80/Contact cut;外喷嘴/IPT80/接触切割
7			Tip;喷嘴
7.1	IVU0679-10	51311S.10	Tip Φ 1.0mm/40-50A /back striking;喷嘴 Φ 1.0mm/40-50A /后引弧
7.2	IVU0679-11	51311S.11	Tip Φ 1.1mm/50-60A /back striking;喷嘴 Φ 1.1mm/50-60A /后引弧
7.3	IVU0679-12	51311S.12	Tip Φ 1.2mm/60-70A /back striking;喷嘴 Φ 1.2mm/60-70A /后引弧
7.4	IVU0679-13	51311S.13	Tip Φ 1.3mm/70-80A /back striking;喷嘴 Φ 1.3mm/70-80A /后引弧
8	ISM0064	60508	Shield cap, gouging;气刨隔离保护帽
9	IVU0675-16	51311G.16	Tip gouging/80A/back striking;气刨喷嘴 80A/后引弧
10	IVF0665		Diffuser IPT80;分流器 IPT80
11	IVB0669	52558	Electrode Plasma IPT80/back striking;等离子电极 IPT80 /后引弧
12	IVZ0674	09800	Plasma torch head IPT80;等离子枪头 IPT80
12a	IFT0709	51620.60	"O"ring Φ 18x15mm;O型圈 Φ 18x15mm
12b	IZN0773	09800.42	Air tube/IPT80;导流管 IPT80
13	IGV0031		Plasma handle manual/IPT80-100/Red;等离子手工手柄/IPT80-100/红色
14	IHJ0722		Protection part/Plasma/Yellow;开关保护档片/等离子用/黄色
15	IHQ0070	185.0031	Trigger;开关
16	IHJ0893		Joint/small/new type;球节套件/小/新式
17			Cable assembly;电缆组
17.1	IVN0801		Cable assembly/IPT80-100/6m 1/4G;电缆组/IPT80/6m 1/4G
17.2	IVN0802		Cable assembly/IPT80-100/12m 1/4G;电缆组/IPT80/12m 1/4G
17.3	IVN0803		Cable assembly/IPT80-100/6m central adaptor;电缆组/IPT80/6m/中央插头
17.4	IVN0804		Cable assembly/IPT80-100/12m central adaptor;电缆组/IPT80/12m/中央插头
18	IVZ0683	09810	Plasma torch auto head IPTM80;等离子自动枪头/IPTM80
18a	IGV0017	07218	Fiberglass position tube/IPTM80-120;自动枪手柄IPTM80-120
19	ICG6006	60368	Spanner for Plasma;等离子枪扳手
20	IZX0078	FY0023	Central adaptor torch side plasma 5 pins;等离子中央插头/5针
21	ISM0708	51853	Circle cutting attachment IPT80;圆周切割附件 IPT80

Component Identification and Explanation

IPT100/IPTM100

RoHS CE EN 60974-7

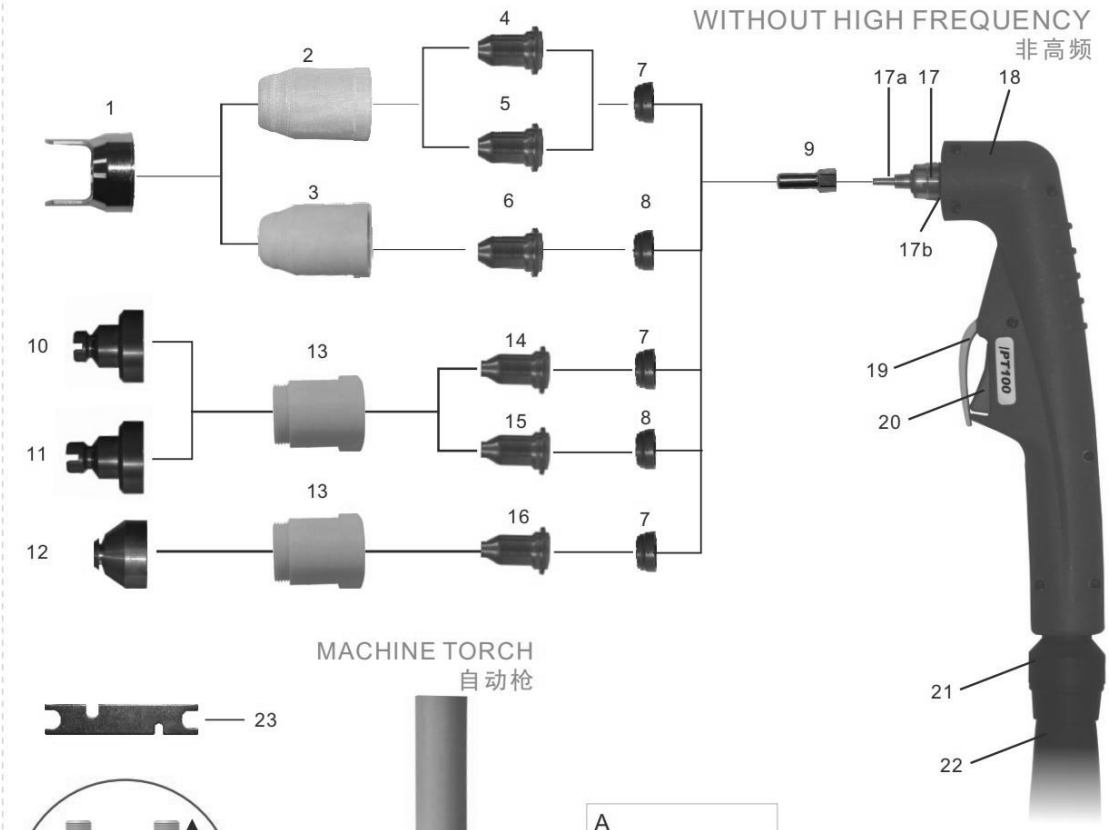

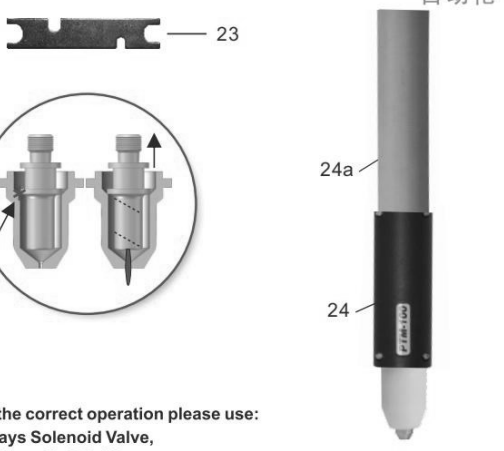





For the correct operation please use:
3-Ways Solenoid Valve,
inside orefic 3.5-4.0mm

Technical Data	技术参数
Current 额定电流	100Amp
Duty Cycle 占载率	60%
Gas 气体	Air/N_2 空气/氮气
Gas Pressure 气压	4.6–5.0 Bar
Gas Flow 气流量	200 LPM
Ignition 引弧方式	Without HF 非高频
Post Flow 气体延时	80 sec. recommended 推荐80秒
Standard Length 标准长度	6M



Component Identification and Explanation

IPT100/IPTM100

EN 60974-7

HAND TORCH

	Code	Ref	Description
A	IVT0936		Plasma torch IPT100/6m 1/4G/back striking;等离子切割枪/IPT100/6m/ 1/4G/后引弧
A	IVT0931		Plasma torch IPT100/12m 1/4G/back striking;等离子切割枪/IPT100/12m/ 1/4G/后引弧
B	IVT0937		Plasma torch IPT100/6m central adaptor/back striking;等离子切割枪/IPT100/6m/中央插头/后引弧
B	IVT0932		Plasma torch IPT100/12m central adaptor/back striking;等离子切割枪/IPT100/12m/中央插头/后引弧

MACHINE TORCH

	Code	Ref	Description
A	IVT0946		Plasma auto torch IPTM100/6m 1/4G/back striking;等离子自动切割枪/IPTM100/6m/ 1/4G/后引弧
A	IVT0941		Plasma auto torch IPTM100/12m 1/4G/back striking;等离子自动切割枪/IPTM100/12m/ 1/4G/后引弧
B	IVT0947		Plasma auto torch IPTM100/6m central adaptor/back striking;等离子自动切割枪/IPTM100/6m/中央插头/后引弧
B	IVT0942		Plasma auto torch IPTM100/12m central adaptor/back strikingr;等离子自动切割枪/IPTM100/12m/中央插头/后引弧

Position	Code	Ref	Description
1	ISM0085	60444	Double pointed spacer/IPT100;两点支架 IPT100
2	IVS0678	60500	Outside IPT100/30-70A;外喷嘴/IPT100/30-70A
3	IVS0676	60501	Outside nozzle IPT100/80-120A;外喷嘴/IPT100/80-120A
4	IVU0672-09	51245.09	Tip Φ 0.9mm/cotact cutting/30-70A /back striking;电极喷嘴 Φ 0.9mm/30-70A/后引弧
5			Tip;电极喷嘴
5.1	IVU0678-10	51246.10	Tip Φ 1.0mm/40-50A /back striking;电极喷嘴 Φ 1.0mm/40-50A/后引弧
5.2	IVU0678-11	51246.11	Tip Φ 1.1mm/50-60A /back striking;电极喷嘴 Φ 1.1mm/50-60A/后引弧
5.3	IVU0678-12	51246.12	Tip Φ 1.2mm/60-70A /back striking;电极喷嘴 Φ 1.2mm/60-70A/后引弧
6			Tip;喷嘴
6.1	IVU0676-14	51248.14	Tip Φ 1.4mm/80-90A /back striking;电极喷嘴 Φ 1.4mm/80-90A/后引弧
6.2	IVU0676-15	51248.15	Tip Φ 1.5mm/100-110A /back striking;电极喷嘴 Φ 1.5mm/100-110A/后引弧
6.3	IVU0676-16	51248.16	Tip Φ 1.6mm/110-120A /back striking;电极喷嘴 Φ 1.6mm/110-120A/后引弧
7	IVF0662		Diffuser IPT100/30-70A;分流器 IPT100/30-70A
8	IVF0661		Diffuser IPT100/80-120A;分流器 IPT100/80-120A
9	IVB0676	52556	Electrode plasma IPT100;等离子电极 IPT100
10	ISM0700	60504	Shield cap,40-70A;隔离保护帽/40-70A/接触切割
11	ISM0644	60505	Shield cap, 80-120A;隔离保护帽/80-120A
12	ISM0064	60508	Shield cap, gouging/120A;气刨隔离保护帽/120A
13	IVS0674	60502	Outside nozzle IPT100/Contact cut;外喷嘴/IPT100/接触切割
14			Tip;电极喷嘴
15	IVU0674-10	51276.10	Tip Φ 1.0mm/40-50A /back striking;电极喷嘴 Φ 1.0mm/40-50A/后引弧
15.1	IVU0674-11	51276.11	Tip Φ 1.1mm/50-60A /back striking;电极喷嘴 Φ 1.1mm/50-60A/后引弧
15.2	IVU0674-12	51276.12	Tip Φ 1.2mm/60-70A /back striking;电极喷嘴 Φ 1.2mm/60-70A/后引弧
15.3			Tip;电极喷嘴
16	IVU0686-14		Tip Φ 1.4mm/80-90A /back striking;电极喷嘴 Φ 1.4mm/80-90A/后引弧
16.1	IVU0686-15		Tip Φ 1.5mm/100-110A /back striking;电极喷嘴 Φ 1.5mm/100-110A/后引弧
16.2	IVU0686-16		Tip Φ 1.6mm/110-120A /back striking;电极喷嘴 Φ 1.6mm/110-120A/后引弧
16.3	IVU0687-22		Tip/120A /gouging/back striking;气刨喷嘴/120A/后引弧
17	IVZ0680	09700	Plasma torch head IPT100;等离子枪头 IPT100
17a	IZN0774	09700.48	Air tube IPT100;导流管/IPT100
17b	IFT0705	51190.41	"O"ring Φ 18x21mm;O型圈 Φ 18x21mm
18	IGV0031		Plasma handle manual/IPT80-100/Red;等离子手工手柄/IPT80-100/红色
19	IHJ0722		Protection part/plasma/yellow;开关保护档片/等离子用/黄色
20	IHQ0070		Trigger;开关
21	IHJ0893		Joint/small/new type;球节套件/小/新式
22			Cable assembly;电缆组
22.1	IVN0801		Cable assembly/IPT80-100/6m 1/4G;电缆组/IPT80-100/6m 1/4G
22.2	IVN0802		Cable assembly/IPT80-100/12m 1/4G;电缆组/IPT80-100/12m 1/4G
22.3	IVN0803		Cable assembly/IPT80-100/6m central adaptor;电缆组/IPT80-100/6m/中央插头
22.4	IVN0804		Cable assembly/IPT80-100/12m central adaptor;电缆组/IPT80-100/12m/中央插头
23	ICG6006	60368	Spanner for Plasma;等离子枪扳手
24	IVZ0684	09710	Plasma torch auto head/IPTM100;等离子自动枪头/IPTM100
24a	IGV0017	07218	Fiberglass position tube/IPTM80-120;自动枪手柄 /IPTM80-120
25	IZX0078	FY0023	Central adaptor torch side plasma 5 pins;等离子中央插头/5针
26	ISM0705		Circle cutting attachment/IPT100;圆周切割附件/IPT100

Component Identification and Explanation

CNC Connections

Pin and board numbers correspond to each other. 11 and 12 are not used. 8 is blank.

This is the Divided Arc Voltage Jumper Location.
Closed: 16 to 1 Arc Voltage (1-10V) (If 16 to 1 is needed, remove cover and move jumper to center and remaining pin.)
Open: 50 to 1 Arc Voltage (1-3V) (Unit is shipped with jumper installed in open position. Do not discard jumper or remove.)

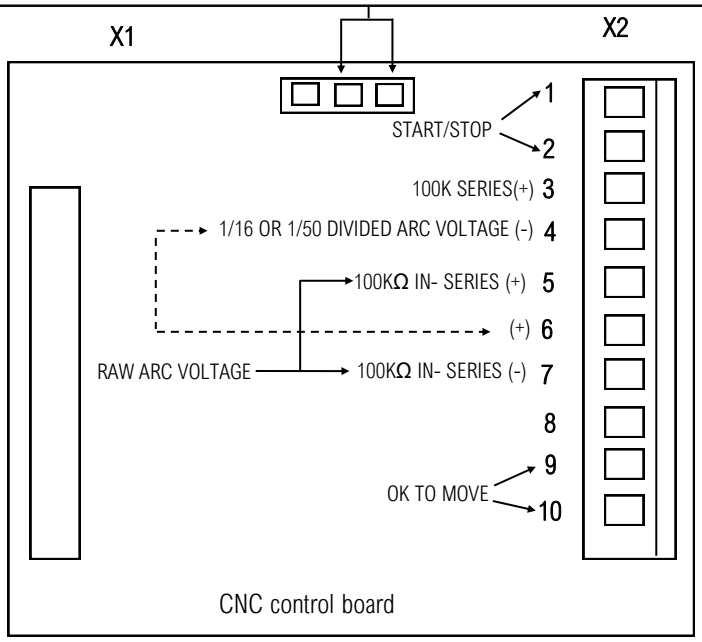

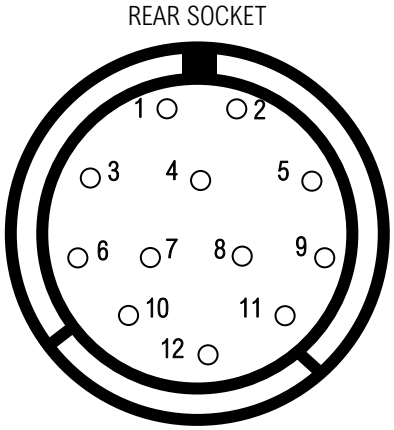

- Pins 1 and 2 activate (turn on) the plasma cutter to start cutting.
- Pins 9 and 10 give the "OK-To-Move" signal. These are Dry "N.O." style contacts. It is a non-electronic switch that ***closes*** when the pilot arc transfers to the cutting arc. Sometimes referred to as "Arc OK".
- Pins 5 and 7 provide the raw, undivided arc voltage, which is used by some controllers to adjust the height of the torch (THC). This is the actual cutting voltage. It runs through 2 -100KΩ resistors to prevent arcing at the connector plug. Many, but not all controllers have a raw voltage option, and is dependent upon the impedance of the input. The raw arc voltage can be used when other systems look for or expect higher voltage signal from 50 to 1 arc dividers for certain brands that produce a higher arc stretch voltage.
- Pins 4 and 6 provide the divided arc voltage. This is selectable by moving the jumper on the CNC circuit board inside the unit to create either 16 to 1 (1-10V) or 50 to 1 (1-3V) ratio to the raw arc voltage output. Divided voltage is used by many controllers for regulating torch height control (THC). The jumper is configured for 50 to 1 voltage output (1-3V) which is technically "open", but the jumper is installed in a neutral position. The machine must be opened and the jumper repositioned for 16 to 1 arc voltage (Remove rear cover and metal cover only to access!) The jumper for 16 to 1 arc voltage will bridge between the center pin and the other open pin position. If using 50 to 1, no change is needed. Retain the jumper for testing the unit.
- Pin 3 is what some controller manufactures refer to as "Ground" this is connected directly to the work piece lead, which is actually a positive polarity. If the controller has a pin for ground this is likely the pin to use.

Please be aware that Everlast does not offer technical support for individual manufacturers. The CNC manufacturers should provide all necessary details for proper connection and setup of their machines. Cable colors and wire configurations are the CNC manufacturers responsibility. Everlast supplies the necessary pin-out information to the rear of the machine along with a plug adapter (CNC models). After this, all the connections are the responsibility of the CNC table owner and the CNC manufacturer.

NOTICE!

The Plasma cutter currently comes configured for 50 to 1 voltage divider for the THC. This is a 1 to 3V operating range. Some CNC tables are configured for 50 to 1 voltage divider but are calibrated based on particular brand with a higher arc voltage range than Everlast and many other brands supply on the standard volt/amp curve. In this case, the voltage range may be 1-5 volts and will not work. In this case, the voltage divider on the CNC needs to be recalibrated, or you will need to use the raw arc voltage if the CNC plasma table control system is equipped to read raw arc voltage. Do not modify the plasma cutter control board in any way or the warranty may be voided. Modification of the CNC control board inside the machine may damage the machine and cause early failure.

NOTICE!

Do not connect anything directly to the output terminals or leads. Do not connect anything from the controller to the chassis of the cutter, especially a ground lead. Do not install any kind of converter or divider inside the machine. Do not modify the CNC control board, or the warranty will be voided.

DANGER!

Raw Arc Voltage is dangerous! Use caution if using the Raw Arc Voltage. This is the most accurate method of control, but careless handling may result in shock or injury to the user. Many systems use either a 50 to 1 (1 to 3V) or a 16 to 1 (1 to 10V) signal to control the torch height with a raw arc voltage option.

Component Identification and Explanation

Additional Torch and CNC Information

Can I change my torch to another brand?

These units have been specifically programmed and designed for use with the blow-back design of the Innotec iPTM or a similar name brand PTM series torches. Changing out to other brands to "hybridize" the unit is not recommended and may result in damage to the machine. Some brands use a higher arc voltage, and this is controlled by the torch's internal design and tolerances. These torches may work for a while, and offer the added convenience of cheaper bulk consumables, but will eventually damage the machine by forcing it to generate a higher arc voltage than it was designed for at any given amperage. It can also theoretically affect duty cycle ratings. If you desire to use another torch with this machine, consult with Everlast before changing. There are some appropriate options.

Why is my torch pilot arc sputtering or going on and off when I pull the trigger.

Pilot arc sputtering is often caused by several factors. The first, air pressure is too low. The second is that it may be too high. However, the third reason, and likely the most common reason is that the consumable size has not been matched with the Amperage setting of the machine. The unit is shipped with consumable sizes designed to be used at or near the maximum output of the machine. When you lower the amperage, the arc is simply being blown out or destabilized. Think of a small garden hose you may use outside your house. Then think of (if it were possible) connecting a fire hose to the same faucet and how weak and unstable the stream would be. Water and electricity do share similar characteristics. Use the torch page for your cutter to identify the proper size and type of consumable for your application. This can also happen if used in CNC mode and the torch holder is too tight, deforming the torch head and preventing the parts from operating correctly. This is common on some import brands of CNC with holders that allow too much pressure to be applied.

How do I set my plasma cutter for hand cutting?

Hand cutting is easy to learn and set. The maximum Amperage setting of your unit will cut even the thinnest pieces and do it well. However, there are two issues concerning this. You may have to move extremely fast, or dross will build up or the metal may weld itself back together. And, you may have a wider kerf than is desired. In order to avoid this, and get the most out of your unit, use the following guide to set your amperage, and to get your machine setup correctly. Be sure to then match the consumable size to the amperage being used. **Use the torch page found in this manual for your cutter and the amperage ranges for different consumables are listed.**

- Keep your standoff to **less** than 1/8" distance from the work piece.
- Always use dry air. Drain compressor daily to improve effectiveness of air dryers and to prevent them from prematurely failing.
- Make sure work clamp is attached directly to the part being cut. Make sure the work clamp is attached to freshly cleaned metal.
- Don't greatly lower air pressure to try to reduce kerf or cut thinner material. Always reduce nozzle orifice size to match amperage. *See Torch pages for different consumable sizes.*
- Use this as a general rule of thumb for good hand cutting speed and quality:
    1. For the first 1/8" of thickness, use 20 amps.
    2. After the first 1/8" add 10 amps for every 1/8" after that.
    3. For Stainless and Aluminum, use settings that are 40% higher.

How do I set my plasma cutter CNC cutting? Can you help provide support advice my CNC table?

You may be looking for CNC cut charts and tables for use. Currently, Everlast does not produce such information. There are numerous brands and types of systems on the market, many are here today, gone tomorrow. It's impossible for us to test and certify every cutting system for use. Our products carry all the standard signals needed, but Amps, speed, piercing and torch cut height is not available. Even though cut speeds and heights etc. may all appear be the same in theory between brands, there are variations that exist from CNC manufacturer to CNC manufacturer. One issue can be calibration. Another is limitation of speeds that a particular machine may have. **However, we do feel the best place to get information and help in setup is from other customers with our products that have personal experience with the product. So, please see our support groups on Facebook "Everlast Welders" or "Owners of Everlast Welders for community supported information.** Many customers freely share their own if you wish to join and just ask. Keep in mind those are not always accurate for your applications, but these pages can be a good starting place for you to develop your own. We are here to provide support up to the rear connection of the unit. We can only offer limited support beyond that aspect since every CNC manufacturer is different. We can help you trouble shoot basic issues with the machine and determine if we feel the unit is with the machine or with the CNC plasma table and software. **Please note: We cannot troubleshoot any aspect of the CNC system other than our plasma cutters. See your CNC supplier for support on their systems.**

CNC rated cut capability is typically half the rating of hand cutting due to limitations of piecing, expected cut speeds, and duty cycles of the machine.

Troubleshooting

Error Codes

TROUBLE CODE WITH WARNING LIGHT/UNIT STOPS WELDING BUT IS TURNED ON.	DIAGNOSIS
E01	OVER TEMPERATURE/ DUTY CYCLE EXCEEDED. Allow unit to rest for 15 minutes while running. The unit should reset. If it does not or condition reoccurs, check for obstacles near unit blocking cooling. Then clean unit internals paying close attention to boards and heat sinks. Make sure unit is unplugged for 10 minutes before opening up for cleaning. For CNC use, if this is regularly occurring, arc length may be too long causing arc voltage to go beyond rated specifications. Can be caused with after-market torches
E02	OVER OR UNDER CURRENT. Check power input cable for length/size, check input voltage. Running on poor quality power supply or dirty power from generator. Can be caused by knockoff or "will fit" torches. Possible internal issue or failed PCB.
E03	AIR PRESSURE TOO LOW OR HIGH. Make sure air is connected before switching this on, or code will appear. Adjust pressure so that the green LED light over the gauge is solidly on.
E04	PARTS NOT IN PLACE. The cap or cup or other part is not in place, or the safety pins in the torch head are not making good contact with the cup.
E05	TORCH SWITCH IS STUCK CLOSED. This simply means that the arc has been trying to start and for too long. If this does not clear after releasing the switch, turn off unit immediately and check torch switch for stuck contact. If the pilot arc is engaged without attempting to cut for more than 3 seconds this will activate.
E06	NO AIR SUPPLY DETECTED. Make sure air is connected to the machine correctly.

Troubleshooting

Common Plasma Cutting Issues

NO.	TROUBLE:	CAUSE/SOLUTION
1.	Air flows but arc does not start within 2-3 seconds.	Check consumables for wear and tightness. Check fuse.
		Check Air Pressure. Sticky or slow spring/piston on torch blow back mechanism. Release trigger and try again.
2.	Air flows but pilot arc does not start or spark but arc starts when nozzle is rubbed on the metal.	Fuse blown. Replace with 30 A automotive type, slow blow. PCB issue.
3.	Will not start arc.	Air Pressure too low or too high. Torch electrode/blow back mechanism stuck in rear position (Clean and lightly regrease plunger mechanism with dielectric grease or replace head). Missing Swirl Ring (usually happens after consumable change).
4.	Pilot arc will not light. Arc will start when torch is drug on the metal.	Possible missing swirl ring. Pilot Arc wire is disconnected.
	Pilot arc will not transfer and amps read approximately 25-27 amps while switch is held. (Arc barely cuts or only "scratches" the surface of the metal or cut is extremely slow on thin materials.)	Check work clamp connection. Make sure rust is removed from work clamp contact area. Faulty Clamp. Arc continuity is not being sensed. If these steps do not correct the issue, contact Everlast.
5.	Arc Sputters.	Inadequate air flow or air pressure. Improperly sized nozzle. Change to nozzle/Tip with smaller diameter orifice as amps are lowered. Readjust air pressure. Loose consumables. Check tightness. Worn Consumables
6.	Consumables are dirty, smutty looking upon inspection. Premature wear on consumables. Shortened consumable life. Tips are melted looking.	Moisture, oil contamination of consumable. Wrong consumables. Poor quality aftermarket consumables. Drag cutting with wrong consumables. Wrong cutting technique.
7.	Premature wear on consumables. Short consumable life. Uneven wear of consumables, melting of cup.	Moisture, oil contamination of consumable. Excessive pilot arc time. Improper cutting technique. Wrong piercing technique.
8.	Arc will not start with pilot arc or by drag/scratch starting nozzle directly on metal. Machine runs.	Torch cup is loose, safety contact pins dirty or not making contact with cup face. Torch switch wire is loose. Problem with Central connector. Torch is not properly connected. IGBT or PCB bad, contact Everlast.
9.	Over current/Duty cycle Error Code. Machine runs, but no output.	Duty cycle exceeded or Over current. Allow machine to cool. Reset main power switch after full cool down period. Make sure fan is not blocked. Check wiring and remove excess/undersized extension cords. Operated on "dirty power" generator and unit has failed.
10.	Unstable arc at lower amps.	Nozzle orifice size is too large. Use nozzle with smaller orifice. Air pressure too high or too low. Poor work clamp connection.
11.	Arc tries to start but irregular, dancing arc and/or arc melts through side of nozzle.	Missing swirl ring, or worn electrode or both. Check and replace. Make sure swirl ring is not cracked.
12.	Arc will try to start if touched to the metal, but no air flow while switch is pressed.	Stuck or dirty solenoid valve. Loose solenoid wire connection. Bad PCB. Contact Everlast.
13.	Air flows continuously. Erratic or unpredictable shutting off of air after post flow time has expired.	Place switch into "normal" or "cut" mode. Reduce post flow time. Solenoid is stuck. Contact Everlast.
14.	Excessively Beveled Cut.	Worn consumables, too high of stand-off height.
15.	Cup and/or nozzle is melting or cracking.	Improper cutting technique/excessive piercing.
16.	Power input circuit breaker trips repeatedly.	Improperly sized circuit. Internal issue. Contact Everlast.
17.	Arc "Blows Out" when ready to cut.	Too high of air pressure. Wrong size consumable for amperage being used.
18.	During CNC use, arc fires inconsistently	Too much clamping pressure on CNC torch or torch clamped too low.
19.	Gas (Air) continues to flow	Dirty or stuck solenoid. Can be serviced and cleaned. Contact Everlast for instructions.