Publish Date: DEC. 2023
EVHCANE220MTSC Rev. 1
USA/North America
©Everlast Power Equipment

EVERLAST
IGBT INVERTER TECHNOLOGY

Hurricane 220 MTS-C

Safety, Setup and General Use Guide For The Hurricane 220 MTS-C



FUNCTION: **MIG/ AC/DC Pulse TIG/DC Stick/Plasma Cutter**
PURCHASE DATE:
MODEL NAME:
SERIAL NUMBER:
OPTIONAL ACCESSORY SERIAL NUMBER:

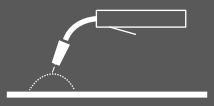

DC 225A

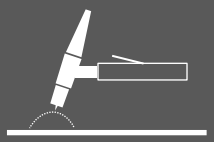

AC/DC 225A

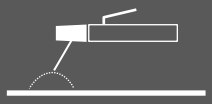

DC 160A

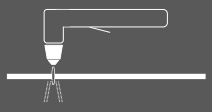

DC 40A

120/240V

Operator's Manual

EVERLAST
IGBT INVERTER TECHNOLOGY
Welders, Plasma Cutters, Multi-Process

www.everlastwelders.com
Need Parts? Need Technical Help? Call: 1-877-755-9353
380 Swift Ave. Unit 12 South San Francisco, CA 94080, USA

TABLE OF CONTENTS

SPECIAL NOTICE AND CALIFORNIA PROPOSITION 65 WARNING	3
CUSTOMER GREETING AND EXPLANATION OF PROCEDURES	4
WARRANTY AND CONTACT INFORMATION	5
SAFETY DISCLAIMER AND HF WARNING	6
SAFETY WARNINGS, DANGERS, CAUTIONS AND INSTRUCTIONS	7
GENERATOR OPERATION INFORMATION/DUAL VOLTAGE INFORMATION	10
SPECIFICATIONS	11
DUTY CYCLE INFORMATION	11
PRODUCT SPECIFICATIONS FOR HURRICANE 220 MTS-C	13
GETTING STARTED, UNPACKING YOUR UNIT AND INSPECTION	15
CONNECTING YOUR UNIT TO THE POWER SOURCE AND WIRING INFORMATION	16
CONNECTION OF AIR COMPRESSOR, REGULATORS	18
TORCH POLARITY AND ACCESSORY CONNECTIONS	19
INSTALLING THE MIG WIRE AND SPOOL GUN CONNECTION	21
FRONT PANEL VIEW AND COMPONENT ID	24
REAR PANEL VIEW AND COMPONENT ID	25
CONTROL PANEL LAYOUT	26
GETTING READY TO WELD/GENERAL INFORMATION AND USE	27
SETTING UP THE UNIT FOR WELDING AND CUTTING MANUALLY	29
SETTING UP THE POWERSET MODE	35
2T/4T GENERAL OPERATION INFORMATION	37
EXPLANATION OF MIG FUNCTIONS AND TERMS	39
MIG TORCH COMPONENT BREAKDOWN AND PARTS/CONSUMABLES (NORTH 24 SERIES)	43
EXPLANATION OF TIG FUNCTIONS AND TERMS	44
TIG TORCH COMPONENT BREAKDOWN AND PARTS/CONSUMABLES (26 SERIES AIR COOLED TORCH)	50
TUNGSTEN SELECTION AND SHAPING	51
EXPLANATION OF STICK FUNCTIONS AND TERMS	54
PLASMA CUTTING WARNINGS	56
EXPLANATION OF PLASMA CUTTING FUNCTIONS AND TERMS	58
PLASMA CUTTING TORCH BREAKDOWN AND PARTS/CONSUMABLES(IPT 40 INNOTEC TORCH)	63
ADDITIONAL TORCH INFORMATION	65
TROUBLESHOOTING ERROR CODES	66
TROUBLESHOOTING GENERAL OPERATION	67

NOTICE:

Product Specifications and features are subject to change without notice. While every attempt has been made to provide the most accurate and current information possible at the time of publication, this manual is intended to be a general guide and not intended to be exhaustive in its content regarding safety, welding, or the operation/maintenance of this unit. Due to multiple variables that exist in the welding field and the changing nature of it and of the Everlast product line, Everlast Power Equipment INC. does not guarantee the accuracy, completeness, authority or authenticity of the information contained within this manual or of any information offered during the course of conversation or business by any Everlast employee or subsidiary. The owner of this product assumes all liability for its use and maintenance. Everlast Power Equipment INC. does not warrant this product or this document for fitness for any particular purpose, for performance/accuracy or for suitability of application. Furthermore, Everlast Power Equipment INC. does not accept liability for injury or damages, consequential or incidental, resulting from the use of this product or resulting from the content found in this document or accept claims by a third party of such liability.

⚠ WARNING!

California Proposition 65 Warning:

This product, when used for welding or cutting, produces fumes or gases which contain chemicals known to the State of California to cause birth defects and, in some cases, cancer. (California Health & Safety Code § 25249.5 et seq.)

⚠ Warning: Cancer and/or Reproductive Harm

www.P65warnings.ca.gov

THANK YOU! We appreciate you as a valued customer and hope that you will enjoy years of use from your welder/plasma cutter multi-process unit. We work to please the customer by providing a well supported, quality product. ***To make sure that you receive the best quality ownership experience, please see below for important information and time sensitive details.***

What to do right now:

1. Print your receipt from your confirmation email that should have been sent to you after your purchase and put it up for safe keeping. If you do not have one, contact us at 1-877-755-9353 (US customers) or 1-905-570-1818 (Canadian Customers). You will need this if anything should ever happen for original owner verification (if bought as a gift, original receipt will still be needed, or explanation sent to Everlast).
2. Read this manual! A large number of tech and service calls are a result of not reading the manual from start to finish. Do not just scan or casually peruse this manual. There are different features and functions that you may not be familiar with, or that may operate differently than you expect. Even if you have expertise in the field of welding, you should not assume this unit operates like other brands or models you have used.
3. Carefully unpack and inspect all items immediately. Look for missing or damaged items. Please report any issues within 48 hours (72 hours on weekend or holidays) of receiving your product,. Take pictures if you are able and contact us at 1-877-755-9353, ext. 207 if any issue is discovered between 9 am and 5 pm Eastern Time M-F (US customers) or at 1-905-570-1818 (Canadian Customers) between 9am and 4 pm weekdays except on Fridays when hours are from 9 am to 12pm Eastern. If outside of the US or Canada, contact your in-country/or regional distributor direct at their service number.

What to do within the next 2-3 days:

1. Make sure your electrical system is up to date and capable of handling the inrush and rated current of the unit. Consult and use a licensed and knowledgeable electrician. If you have downloaded this manual in expectation of delivery, get started now.
2. Make sure this machine is plugged in, turned on, and tested with every process and major feature, checking for proper function. You have a 30 day period to test and thoroughly check out the operation of this unit under our 30 day satisfaction period. If something is wrong, this policy covers shipping on the unit (30 day satisfaction policy applies to the USA only for the 48 lower states and D.C., territories and provinces are excluded) or any incidental parts that may be needed to resolve any issue. After this 30 day period, if you find something wrong with the unit, you will not receive the benefit of free shipping back and forth to resolve this issue. Your unit is still covered under the 5 year parts/labor warranty, but shipping is covered by the customer after the 30 day period is over. The first 30 days of operation with any electronic item is the most critical and if any issue will happen, it will often happen during this time. This is why it is very important that you put this unit to work as soon as possible. Any issue should be reported within 48 hours (72 if on the weekend or holiday). Everlast will not be liable for any shipping after that time.

What to do within the next 30 days:

Visit our website (US customers). Go to www.everlastwelders.com. Navigate to the resources tab and to the "product registration" page to register your product. While keeping your receipt/proof of purpose is still required for verification of ownership, registering will help us keep your details straight and establish a chain of ownership. Don't worry, though, your warranty is still valid if you can't do this. Remember: Always keep your receipt even if you register. You may want to staple a copy to your manual.

What to do if you have a warranty issue or problem with the unit:

1. Unplug the unit. (Also do this before any maintenance or cleaning is done.)
2. Do not attempt a self-repair until authorized by an Everlast representative. This does not include performing routine maintenance such as point gap adjustments or regular internal cleaning. Any third party repairs are not covered under warranty, and can further damage your unit.
3. Within 24-48hours, (or by the next working business day) you must contact U.S. tech support at 1-877-755-9353 ext 207(U.S. hours are 9 am to 5pm Eastern for tech support and 9 am to 5 pm Pacific for the business/sales office). If you are in Canada contact 1-905-570-1818 (Canada hours are 9am to 4pm M-Th, 9am to 12pm Fri). Although phone contact is preferred to establish a warranty claim, you may send an email to tech@everlastwelders.com (US) or mike@everlastwelders.ca (Canada) along with your contact information and brief explanation of the issue and ask for a follow up call. If you contact us via phone, and you do not reach a live person, please leave a brief message with the nature of your problem and your contact information. You should expect a call back within 24 hours. It is also a good idea to follow up the message with an email.
4. Be prepared with as much information as possible when you talk with a tech advisor, including a details of the failure, settings, and application of the unit. ***NOTE: A Proof-Of-Purchase (receipt) is required before returning the unit for warranty or before warranty parts can be sent to you.***
5. Keep in mind that, you may be asked to check a few basic things. Before you call, having a screwdriver and volt/ohm meter at hand is a good idea and will save time. Many issues can be resolved over the phone. If the issue cannot be resolved over the phone/email, you may be given an option to return the unit, or have a part shipped to you, at Everlast's discretion. Keep in mind, you may be asked questions that seem basic, or elementary to your knowledge base. These are not meant to question your knowledge, but rather to make sure nothing is overlooked. However the tech chooses to proceed, please cooperate with the process, even if you think you know what the cause or issue is. You may be asked to check something or open the unit during the diagnosis. This does not void the warranty! Opening the unit is a part of routine maintenance and cleaning. This is an important step. The willingness of the customer to work with tech support can save lots of time and accelerate the warranty process. For

warranty to be honored, you will need to make sure that you follow these guidelines. ***Units that are returned without an RMA (issued by the tech support department) may not be repaired under the warranty agreement and you may be charged for the repair and can result in a delayed repair as well.***

What to do if you need setup help, guidance, weld issue diagnosis or have general product compatibility questions.

Call us at 877-755-9353 ext. 204 for welding guidance and general welding issue diagnosis. Or email performance@everlastwelders.com with the basic issue you are having, along with your specific settings, and welding application.

Hey...wait, what is my warranty?

Warranties and service policies and procedures vary from country to country and are maintained and supported by the regional or in country distributor of Everlast welding equipment.

USA Customers Only: For full details on the 5 year parts and labor warranty, 30 day satisfaction policy, terms of sale, and how to proceed with a warranty claim, please visit: https://www.everlastgenerators.com/standard-warranty. Accessories are covered by a separate warranty and detailed information can also be found at the link above.

Canada Customers Only: For full details on the 3 year parts and labor warranty, terms of sale, and related policies and procedures, please visit: https://www.everlastwelders.ca/terms.php.

Who do I contact?

USA Technical Support:

Email: tech@everlastwelders.com
1-877-755-9353 ext. 207
9am-5pm Eastern (Closed holidays)
Monday-Friday

USA Welding Support and General Product Information:

Email: performance@everlastwelders.com
1-877-755-9353 ext 204
9am-6:30 pm Eastern (Closed holidays)
Monday-Friday

USA Sales and Main Office:

Email: sales@everlastwelders.com
1-877-755-9353 ext 201
9am-5pm Pacific (Closed holidays)
Monday-Friday

Canada Technical Support:

Email: mike@everlastwelders.ca
905-570-1818
9am-4pm Eastern Monday-Thursday
9am-12pm Eastern Friday

Canada Sales and Main Office:

Email: sales@everlastwelders.ca
905-570-1818
9am-4pm Eastern Monday-Thursday
9am-12pm Eastern Friday

Other Countries and Regions:

Visit the U.S. Website @ www.everlastwelders.com and click on the flag of the country or region represented that is closest to you. If your country or region is not found, call the U.S. office at 1-650-588-8588 between the hours of 9am to 5pm Pacific, Monday through Friday.



Safe operation and proper maintenance is your responsibility.

Everlast is dedicated to keeping safety a top priority. While we have compiled this operator's manual to instruct you in basic safe operation and maintenance of your Everlast product, it is no substitute for observing safe welding practices and behavior. Safe welding and related cutting operations require basic knowledge, experience and ultimately the exercise of common sense. **Welding does significant hazards to your health and life! Exercise extreme caution and care in all activities related to welding or cutting. Your safety, health and even life depends upon it.**

WARNING! If you do not have proper knowledge or capability to safely operate this machine, do not use this machine until proper training has been received!

While accidents are never planned, preventing an accident requires careful planning. Stay alert!

Please carefully read this manual before you operate your Everlast unit.

The warranty does not cover damage or harm created by improper use. neglect of the machine or failure to follow safe operating practices.

NOTICE:	
	Welding and cutting operations may generate undesirable High Frequency (HF) and EMF energy. This can interfere with surrounding electronic equipment such as computers, routers, CNC equipment, televisions, radios, fluorescent lighting etc. If disturbance in surrounding electrical and electronic equipment is noted, consult a licensed electrician to help properly ground surrounding equipment to limit the interference. This machine may cause GCFI and ground fault outlets to malfunction. This unit is designed to be operated on a dedicated, properly grounded circuit.

Safety Warnings, Dangers, Cautions and Instructions

	**NOTICE.** This unit manual is intended for users with basic knowledge and skillset in welding. It is your responsibility to make certain that the use of this welder/plasma cutter is restricted to persons who have read, understand and follow the warnings and instructions in this manual. If you or the operator needs further instruction, contact Everlast welding support at 1-877 755-9353 ext. 204 or seek qualified professional advice and training.
	**WARNING!** High Frequency (HF) energy can interfere with the operation of pacemakers and can damage pacemakers. Consult with your physician and pacemaker manufacturer *before* entering an area where welding and cutting equipment is in operation and *before* using this welder/plasma cutter. Some pacemakers have limited shielding. Alert any users or customers of this potential problem.
	**WARNING!** Use approved safety glasses with wrap around shields and sides while welding and working in the weld area or serious eye damage or loss of vision may result. Use a grinding shield in addition to the safety glasses during chipping and grinding operations.
	**WARNING!** When welding always use an approved welding helmet or shielding device equipped with at least an equivalent of a shade 9 or greater. Increase the shade number rating as amperage increase over 100 amps. Inspect helmet for cracks in lenses and in the helmet. Keep lens covers in good condition and replace as necessary.
	**WARNING!** Welding/cutting operations carry inherent risks which include but not limited to possible cuts burns, electrical shocks, lung damage, eye damage and even death. Take all appropriate measures to use proper Personal Protective Equipment (PPE). Always use leather welding gloves, closed toe (preferably reinforced or steel toe leather shoes, and long -sleeved flame resistant clothing (i.e. denim). Do not wear Poly/Nylon blend materials.
	**DANGER!** Welding/cutting poses shock and electrocution risks. Keep this welding equipment dry. **Do not weld in the rain or where moisture accumulates.** Use dry, rubber soled shoes, gloves and clothing when welding. Do not rest or contact work clamp (ground) when welding. Keep all parts of the body insulated from the part being welded when possible. Do not touch terminals or connections while the unit is on. Consider all parts to be "live" at all times even if no live work is being performed. Do not use frayed welding cables.
	**CAUTION!** Fires are possible but also preventable while welding. Always remove flammable rags, papers, and other materials from the weld area. Keep rags stored in an approved flame proof canister. Keep a fully charged fire extinguisher at hand. Remove any fuels, oils, paint, pressurized spray cans, and chemicals from the weld area. Make sure any smoke/fire detectors are function properly. Do not weld on tanks, drums or barrels, especially if pressurized or sealed. Do not weld on any container that previously held fuel or chemicals. Make sure the weld area is clear of flammable materials such as grass or wood shavings solvents and fuels. Do not wear frayed or loose clothing. Visually inspect and recheck the work area after welding looking for smoldering debris or flames.
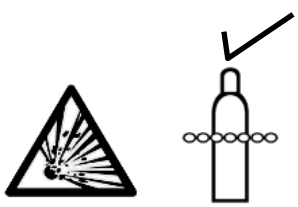	**WARNING!** Welding gas cylinders are under high pressure. Keep all gas cylinders upright and chained to a cart or held safely in a safety holding pen. Never transport gas cylinders in an enclosed car van or other vehicle. Transport gas cylinders securely. Keep all cylinders capped while not in use or during transport. Replace the cap on the cylinder when it is going to be more than 24 hours before use. Do not use or attempt to repair faulty regulators. Never weld on gas cylinders. Keep gas cylinders away from direct sparks.

Safety Warnings, Dangers, Cautions and Instructions

	**DANGER!** Welding and cutting operations pose serious inhalation hazards. Some of these hazards are immediate while others are cumulative in their effect. **Do not weld in enclosed spaces or in areas without adequate ventilation.** Fumes and gases released in the welding and cutting operations can be toxic. Use fans or respiration equipment to insure adequate ventilation if you are welding in a shop or garage area. **Do not weld on galvanized metal under any circumstance. You may develop metal fume fever. Symptoms are similar to lu-like symptoms. Seek medical advice and treatment if you are exposed to galvanized welding fumes.** **If you experience any eye burning, nose or throat irritation while welding, these are signs that you need more ventilation.** If you feel these symptoms: • Stop work immediately and relocate work area with better ventilation. • Wash and clean your face and hands. • Stop work completely and seek medical help if irritation persists
	**DANGER! Never use brake cleaner or any chlorinated solvent to clean or degrease metal scheduled to be welded or other related equipment in the area being welded.** The heating of this cleaner and its residue will create highly toxic phosgene gas. Small amounts of this vapor are harmful and can lead to organ failure and death. If degreasing of a part is necessary, use Acetone or an approved pre-weld cleaner. Use the proper personal protective equipment (PPE) when handling any cleaners/solvents.
	**DANGER! People with pacemakers should consult a physician and pacemaker manufacturer before welding. There is a potential for damage or serious malfunction resulting in death. High Frequency energy (HF)/Electromagnetic Fields generated during welding can interfere with pacemaker signals, even permanently damaging it. Some pacemakers offer some shielding, but restrictions regarding amperage and HF starting of welding arcs may be placed upon the individual. Warn all potential bystanders that they should exit the work area if they have a pacemaker or similar medical equipment before welding. Severe electrical shock leading to injury or death may occur while using the plasma cutter if the user becomes part of the circuit path. While the Amp output of the plasma cutter is limited, the unit may produce an OCV of 300V or greater. Consult with a Physician if a pacemaker is expected to be implanted.**
	**DANGER!** Never defeat or modify any safety guards or shields. Keep all safety covers and shields in place. Never place your fingers in or near a fan shroud or insert any object into the fan(s).
	**DANGER! Do not supply more than 100 PSI to the air-pressure regulator supplied with this machine.** If you do, the regulator may leak or explode, causing severe injury or death. Use a separate regulator mounted at the air-compressor to control supply air pressure. **Never use an air compressor without a separate compressor mounted air regulator!**

Safety Warnings, Dangers, Cautions and Instructions

	**CAUTION!** Trip Hazards exist around this unit. Cords, cables, welding leads and hoses pose a trip hazard. Be aware of their location and inform others of their location. Tape and secure them so they will stay out of high traffic areas.
	**CAUTION!** Welded metal can stay hot long after welding is completed. Burns may occur. Always wear gloves or use tongs/pliers when handling welded or cut metal. Remember the heat from the metal may catch other material on fire. Always have a fire-proof area ready to place welded components until they fully cool. Use soap stone or a metal marking marker to label the metal as "HOT" to serve as a reminder to all present in the area.
	**CAUTION!** Welding and cutting operations generate high levels of ultraviolet (UV) radiation which can burn and damage skin and eyes. The intensity is so high that exposed skin and eyes can burn in a few minutes of exposure. Minimize direct skin and eye exposure to this intense form of radiation by using proper PPE and sun screen where appropriate.
	**CAUTION!** Do not allow bystanders. Do not allow others without proper Personal Protection Equipment (PPE) suitable for welding to stand in the welding area or to observe welding and welding related activities. If protection is not readily available, use a welding screen to separate the welding area from the rest of the area. If no protection or screen is available, physically exclude them from the welding area by a wall or other solid divider. Keep all pets and young children away from the welding area.
	**CAUTION!** Electromagnetic Fields can be generated by this unit and radiate into the work place. The effect of EMF is not fully known. Exercise caution when welding by: NOT draping welding leads (guns/cables) over your shoulders or arms, NOT coiling them around your body, NOT inserting yourself directly between the cables, and by NOT contacting the unit while welding. DO keep the work clamp connected as close as possible to the area of the weld and directly to the object being welded whenever possible.
 	**DANGER!** Never touch connectors or fittings while this machine is turned on. Keep all safety covers in place when not in use. **Never remove or replace the plasma consumables while the machine is turned On.** Even though the torch is equipped with a "parts-in-place" safety disconnect, it is possible that overheating of the torch, excessive wear or damage to the consumables may cause this feature to malfunction. Make sure the brass safety cut out pins on the torch head remain in good repair and that the spring loaded function remains operational and keeps them fully extended when the torch cap is removed. The Open Circuit Voltage (OCV) while in plasma mode may exceed 300V. This is enough to cause burns, injury severe electrical shock, injury and instant death.

Important Information: Operating this unit with a generator or other off-grid service.

Minimum Required Surge Watt Rating: 8500W
Required THD Rating: 5% or less

This multi-process unit should only be operated on a generator certified by its manufacturer to produce clean power. Clean power is equivalent to the quality of household or shop/garage type power. This means the generator must have 5% or less total harmonic distortion (THD) of the Sine wave. If you are unsure of the power output type of the generator, contact the manufacturer of the generator for verification. *Do not operate on square wave or modified square wave generators or converters/inverters or damage or malfunction may occur. Damage caused by running this unit off of "dirty" power or modified sine waves may not be readily apparent and can be cumulative in nature. However, damage may present itself immediately. The damage caused by running this unit on "dirty" power usually leaves internal tell-tale signs and damages specific parts.*

NOTICE! Operation of this unit with generators not rated by its manufacturer as providing clean power (5% or less THD) is prohibited and will void the warranty. Operation with modified sine wave, or square wave generators and inverters/converters/UPS that do not produce "sine wave" output is prohibited and doing so will also void the warranty. Use only with generators/inverters/converters that produce an equivalent type of sine wave used in shops, homes and "shore" type systems. *The generator manufacturer determines this rating, not Everlast.* Do not assume that a name brand generator, or a "new" generator automatically provides clean power. Price paid does not guarantee a clean power output either. There are multiple brands at various price points capable of producing clean power. Investigate this before purchasing a generator. The manufacturer will usually state that a unit is clean power in the advertising information and will state actual THD. If the manufacturer does not state it, contact the manufacturer directly for a statement concerning actual THD.

WARNING! Do not start or stop the generator with the unit switched on. Never use the generator in ECO mode or an auto-idle mode. Even with a clean power rated generator, this action can damage the unit. *Turn the unit on only after full generator R.P.M. has been achieved and the engine is sufficiently warmed up.* Closely monitor generator fuel level so that the engine R.P.M doesn't drop or completely shut down with the unit plugged in. **For best practice: do not start or stop the generator with this plasma cutter plugged in, even if it is turned off. Unplug the unit before shutting down the generator.**

If using with a welder/generator, make sure the manufacturer has determined that the generator portion produces a clean sine wave. Many older models do not. Some newer models use "divided" power between welding and generating and cannot supply the full power to the unit unless the fine current control knob is turned to maximum. Do not use this unit with such welder/generators unless the Power/fine current control is turned to 100%. Some welder generators do have a separate alternator for generating power. If this is the case, be sure not to weld or load the machine while this unit is in use.

WARNING! Always make sure any generator or welder generator is properly wired and grounded, according to local and national code. Ground the machine per the generator manufacturers instructions to meet code requirements. Improperly grounded generators may damage the machine and more importantly may cause severe injury or death.

Dual Voltage Single Phase 120/240V Operation:

This unit can be used with either single phase 120V or 240V output. Output will be reduced automatically when operating on 120V. However, for the higher voltage (since the standard of 240V is nominal and actual voltage may vary somewhat), the unit may be used with single phase 208V if the voltage does not drop below 205V. If using this unit on 208V, duty cycle and display accuracy may be affected. Rated and Inrush Amperage will rise proportionately as well. If you decide to use this machine on 208V, before installing permanently, have an licensed electrician monitor voltage fluctuations, particularly under load and during peak use times. If the voltage remains constant, and steady without dropping below the 205V threshold, this unit may be used. Damage caused by using on undervoltage power sources is not covered by the warranty. Always be aware of the voltage output and the quality of the power source being used. Voltages below 220V may result in MIG wire speed calibration issues that cause the wire speed set to be higher than actual output at the feeder.

REAR OUTLET WARNING!

If equipped, never use the electrical power outlet on the back of this machine for anything other than powering an Everlast brand water cooler. This is a special outlet designed to produce 240V with limited amperage draw. No other device or brand should be used in conjunction with this unit's outlet. This outlet is designed to supply 240V only. Do not attempt to modify, or change this outlet for use with anything else other than an Everlast brand water cooler designed for 240V operation. Severe damage, fire or injury may occur if other devices or other brand equipment is connected. **Not for use while operating on 120V!**

Specifications

Duty Cycle

Duty Cycle is simply the amount of time out of a 10 minute period in which the unit can operate. For example, if this unit has a duty cycle of 25% at maximum rated output means that the unit can be operated for 2.5 minutes out of 10 minutes at the maximum rated Volt/Amp settings. The rated operation time may be continuously, or intermittently during the 10 minute period of time. This rating standard (United States) is based on a maximum ambient temperature of 40°C. Operating above this point, or at lower temperatures with high humidity may reduce the duty cycle rating. Of course, the duty cycle may increase somewhat as ambient temperature drops. Regardless, this unit's duty cycle is not controlled by a timer. Rather, this unit is equipped with a heat sensor located on a heat sink near the critical power components of the plasma cutter. If the operating temperature of the unit is exceeded, welding output will stop and an over-temperature warning light/error code will be displayed on the panel. **If a duty cycle event is registered, do not turn the unit off!** Allow the plasma cutter to continue to run at idle for at least 10-15 minutes until the temperature has fallen enough to reset the sensor and over-temperature warning light. *Even if the unit resets, allow the unit to cool for a full 15 minutes, or the duty cycle will be more quickly triggered since the unit resets just below the heat threshold.* ***The fan(s) must continue to run for a full 15 minutes to cool the unit properly after the duty cycle shut down has occurred.*** After 15 minutes of cooling, you may switch the unit off if you are finished welding. If the unit does not automatically reset after 15 minutes, turn the unit off. Wait for 15 seconds before turning the machine back on. If the unit does not reset, contact technical support for further advice and assistance. As a best practice, when you have completed welding and have been welding continuously for extended periods of time, keep your unit on for 10 additional minutes without welding to allow it to cool.

Even at a setting where duty cycle equals 100%, this does not mean that the unit could not theoretically overheat in the 11th minute. Although this is not likely, the point is that a rating of 100% duty cycle, no matter the output is not a rating based on an infinite amount of time. The set rating standard of 10 minutes means that the unit should not go into an overheat cycle when used within the stated parameters until the 10 minutes is up.

The intentional and/or repeated triggering of the duty cycle protection feature on this unit will shorten the lifespan of the unit's electronics and can weaken internal components. The effect of overheating your unit repeatedly takes a cumulative toll on the unit.

NOTICE: These units are tested by an international and independent certifying agency for their ability to sustain the claims of duty cycle, under lab induced conditions which are typically more stringent than average shop conditions.

Specifications

BREAKER SIZING AND WIRING REQUIREMENTS

Before installation of this unit in any facility, always consult a licensed local electrician familiar with the requirements of properly wiring a plasma cutter into the electrical supply. Refer to the National Electric Code (NEC) and local codes. If needed, refer the electrician to Article 630 of the NEC during consultation to determine proper application and wiring needs. Use the I1MAX and the I1EFF ratings listed above to determine the proper breaker and conductor (wire) sizing required. Everlast plasma cutters are designed around use in industrial wiring applications and are intended to be used with modern electrical systems. Household wiring may need to be upgraded before this plasma cutter may be installed. Additional HF protection and isolation may be needed if this plasma cutter interferes with the operation of electrical/electronic equipment.

IMPORTANT: Do not modify this unit's wiring, power plug or conductors. This unit meets the standards for conductor sizing on the power cable and takes into account power cable length, duty cycle and rated current.

NOTICE: POSSIBLE HF INTERFERANCE FROM THE INVERTER AND WHAT TO DO IF IT OCCURS

If any electrical disturbance is noticed as a result of the high frequency interference that is possible with the operation of the inverter switching and operation, the HF service bolt should be connected directly to a 12 gauge wire that is bonded directly to an outside copper ground rod driven into moist soil. Additionally, all metal items including any metal frame or sheeting of the building should be connected and grounded to separate copper ground rods driven into the ground at 10 foot intervals around the perimeter of the building. This includes items such as tables, carts, rack material, metal surrounds, etc. that may act as "antenna" to radiate/absorb HF energy. Additionally, all cords and welding leads should be twisted together and run directly to the work without coils or excess cabling. Normally, this will not be required, but it is supplied in the case of any interference that may be observed. This is usually observed in older or non standard installations where grounding and ground isolation is a problem.

NOTICE: DO NOT USE WITH DUAL SHIELD OR FLUX CORED OPERATION WITH GAS (FCAW-G)

This unit is not designed or recommended for use with Dual shield type welding. This is considered a heavy industrial process that this unit does not have typically enough output in voltage, amperage and duty cycle to sustain welding at recommended settings. Most dual shield applications use welding machines that are 300A and over. The synergic feature of the unit does not support dual shielded operation either. The Flux-Cored mode is a gas-less type of operation and does not include a gas shield function.

WARNING!

This unit is not designed for Air Carbon Arc Gouging/Cutting or for Plasma Gouging or Plasma scarfing operations. Do not this unit for these applications. It is not designed to sustain the high volt and long arc characteristics needed for Carbon Arc or Plasma gouging use.

Specifications

Hurricane 220 MTS-C Product Specifications

Construction Type	Inverter (IGBT based, Digital Control)
Input Voltage	120V OR 240 V (± 10%) 50/60 Hz Auto-Adjusting
Phase	1 Phase 50/60Hz
I1MAX Current Rating (Inrush Amps)	120V: 28A 240V: 31A
I1EFF Current Rating (Rated Amps)	120V: 17A 240V: 16A
OCV	64V MIG/ Stick; 250V Plasma
MIG Duty Cycle @ Maximum Output (Rated at 40° C/104° F) *	120V: 35% @ 125A, 60% @ 100A, 100% @ 80A 240V: 25% @ 225A, 35% @ 200A, 60% @ 160A, 100% @ 130A
TIG Duty Cycle @ Maximum Output (Rated at 40° C/ 104°F)	120V: 60% @ 125A, 100% @ 100A 240V: 35% @ 225A 60% @ 200A, 100% @ 160A
Stick Duty Cycle @ Maximum Output (Rated at 40° C/104° F)*	120V: 35% @ 100A, 60% @ 80A, 100% @ 60A 240V: 60% @ 180A, 100% @ 140A
Plasma Duty Cycle @ Maximum Output (Rated at 40° C/104° F)*	120V: 60% @ 25A, 100% @ 20A 240V: 60% @ 40A, 100% @ 30A
MIG Output Range V/A (DC Output Only)	120V: 15.5-20.25V/ 30-125A 240V: 15.5-25.3V/ 30-225A
TIG Output Range V/A (AC/ DC output)	120V: AC 10.8-15V/20-125A, DC 10.5-15V/10-125A 240V: AC 10.8-19V/20-225A, DC 10.5-19V/10-225A
Stick Output Range V/A (DC Output Only)	120V: 20.4-24V/10-100A 240V: 20.4-26.4V/10-160A
Plasma Output Range V/A (DC Output Only)	120V: 88V-90V/20-25A 240V: 88-96V/20-40A
MIG Wire Feed Speed:	120V: 60-400 IPM 240V: 60-600 IPM
MIG Inductance	0-100%
MIG Burn Back Time	0-2 Seconds
MIG Spot Time	.5-15 Seconds
MIG Stitch Time	0-15 Seconds
MIG Wire Size Handling Capability	.023"-.045" (with optional drive rolls, liner and contact tip sizes)
MIG Drive Roll Sizes Included (2 each for 4 roll system)	.030" / .035" (.8mm / .9mm) V-Groove for MIG .030" / .035" (.8mm / .9mm) Serrated Groove for Flux-Core
MIG/TIG Pre Flow Time	0-10 Seconds/0-10 Seconds
MIG/TIG/Plasma Post Flow Time	0-10 Seconds/0-10 Seconds/5-45 Seconds
TIG AC Frequency	20-200Hz
TIG AC Balance	30-75%
TIG Upslope Time	0-10 Seconds
TIG Downslope Time	0-10 Seconds
TIG Pulse Frequency	.5-150Hz
TIG Pulse Time On	3-95% of Welding
TIG Pulse Amps	5-95% of Welding Amps
Stick Hot Start Time	0-2 Seconds
Stick Hot Start Intensity	0-100% above set Amperage)
Stick Arc Force	0-100% above set Amperage
Stick 6010 Capable	Yes
Plasma Start Type	Blow-back style, with Pilot Arc. (Non High frequency)
Recommended Plasma Air Pressure	65 to 75 PSI while cutting. Max. supply pressure: 90PSI
Recommended Minimum Compressor Size	30 Gallon with 5.3 CFH or greater @ 90 PSI
MIG Gun Type/Length/ Connector Type	Innotec 15AK Series 12.5 ft/ 4m with Euro Quick Connect
250A Work Clamp with Cable Length	6.5 ft (2m) DINSE 35/50mm^2 (1/2 nom. dia.)
250A Stick Electrode Holder Length	9.5 ft (3m) DINSE 35/50mm^2 (1/2" nom. dia.)
Plasma Torch Type and Length	Innotec iPT 40, 15 ft.
Power Cable Length	6.5 ft (2m)
Power Plug Type for Single Phase Operation 240V	NEMA 6-50P (Standard 240V Welder Type)
Cooling Type	Full Time, High Volume Fan(s)
Dimensions (Approximate without handles attached)	15.7 H X 11.1" W X 27.5" L (400mm X 280mm X 700mm)
Weight (Bare Unit with Cord and Handles Attached)	96lbs.
Ingress Protection Rating	IP21S

Setup Guide

WARNING!

Do not leave more than one torch connected at the same time. Leaving multiple torches connected at the same time may result in accidental arcing, and personal injury, or shock. Machine damage may also occur. Do not touch the connector terminals while the unit is on. All terminals have the potential to be live when any process is used. Keep any terminal covers in place for safety.

Before changing processes:

1) Remove the torch in current use.
2) Select the new process desired. Observe the recommended polarity suggested on screen or in the manual.
3) Shut down machine.
4) Connect the torch associated with the desired process. Double check polarity.
5) Make sure the proper gas is connected to the rear of the unit. If it is plasma, try to adjust air pressure up before turning on machine or error code will be present when machine is turned back on. If plasma is selected before air pressure is connected, and error code will be displayed.
6) Turn the machine on and check for leaks.

Setup Guide

Getting Started

UNPACK YOUR UNIT.

Upon arrival, you will need to completely unpack your welder, and check things over. This is a time sensitive matter. Do not delay or hold the plasma cutter unopened in the box. First, make sure the unit is opened from the top. Be careful with using knives and sharp objects so you won't cut cords and cables inside the boxes. Lay all items out and inspect them.

You should have the following in your box:
1. Welder/Plasma Cutter Unit.
2. Air-Regulator with built in water trap/particulate filter.
3. Floating Ball Regulator for MIG/TIG
4. 24 Series MIG Gun/Torch.
5. 250A Work Clamp (approx. 9.5 ft with cable).
6. 250A Stick Electrode Holder (approx. 9.5 ft with cable).
7. Consumable Starter Kit for Plasma and Misc. Parts Bag(s).
8. iPT40 Plasma Torch.
9. 240V to 120V power cord adapter.
10. 26 Series 12.5 ft air-cooled rigid neck TIG torch
11. Foot pedal

INSPECT AND ASSEMBLE YOUR UNIT.



When you receive your package, inspect the unit for damage. Check for the presence and general condition of the accessories. Some slight rubbing or chaffing of some of the accessories may be present, but this is considered normal. Most notably, the MIG and Plasma torches may appear to be used or fired. This is because it has been live tested in the factory for proper operation before putting into the box. If any item is damaged or missing, please inform Everlast within 72 hours of product receipt. See pages 4 and 5 for more details. Assemble the front, middle and rear handles with the supplied screws. Use a hex key to tighten the socket head cap screws. (Screws may be found in the consumable bag if they are not preinstalled in the case.) IMPORTANT! Do not overtighten the screws. *If desired for proper fitment or for space saving, the unit may be used without the handle. However, install the screws and tighten them to the cover anyway. Do not leave them out. Be sure to reinstall the handle if the unit is to be carried or lifted. Do not lift from any other point on the machine or damage may occur.*

POWER UP AND TEST YOUR UNIT.

You will need to fully test the unit as soon as possible. Within 72 hours after receipt of the unit, be sure to have every thing you need at hand to test the unit. Make sure the correct input power, wiring, and plug configuration is being used. Make sure you have the regulator and air compressor installed (See following section). If you do not have them installed, when you select the plasma function you will immediately receive an error code of "E 06" because air pressure is low/disconnected. Then, power up your machine without any accessories installed except for air compressor and air pressure. Allow the unit to idle for 15 minutes. Check and observe operation of knobs, controls and buttons, cycling through each as required. Make sure the fan is running at full speed. After the test is completed, turn the unit off, connect the torches and cables. Then, conduct live testing of all the functions and features of the machine. For testing and cutting make sure work clamp is connected directly to the part being welded (work). Check for arc starting and stability. If you are testing the unit on 120V, the cutting arc may not be stable unless you have purchased the optional .6 or .8mm consumables listed on the torch page in this manual. If any welding or cutting problems are observed and they persist, contact Everlast. See page 5 for more contact information. ***NOTICE:*** *Cosmetic damage claims after 30 days will not be accepted, unless Everlast is contacted and informed of such delay and reason for such a required delay (i.e. Overseas in deployment).*

NOTICE:

This unit includes one additional .030" MIG contact Tip (it may also include a .040" tip for specialty wires) and no other consumables for MIG. These are available direct from Everlast, online from other sources and are also available locally for the 15 series MIG gun at many places that sell welders and welding supplies. This unit does arrive with a basic plasma consumable starter kit, designed to get you only through a few days of plasma cutting. You should have 5 (pipe/non-shielded) cutting tips and electrodes. You will need to purchase a more extensive kit soon after receiving and using your unit. These consumables are also available direct from Everlast, from other online sources, and from many local stores that sell welding and plasma cutting equipment. If you don't order extra consumables soon after you receive this unit, you may run out more quickly than you expect. This kit contains stand-off type, non-shielded consumables that are sized for the maximum Amp operation of the unit are designed for stand-off cutting. Lower Amp operation, gouging or drag cutting will require the purchase of additional consumables (See torch parts page for amp ratings and sizes). *Additionally, some miscellaneous parts may be found together with the consumable kit which may include fasteners, brackets and .* If you think you are missing a needed part, check the consumable kit bag and box before calling Everlast for replacement. If you are missing parts, call 1 -877-755-9353 ext. 206 for help (Only in the USA, for other areas, contact the distributor in your region).

IMPORTANT:

Even though the unit features two separate gas input connectors, only one regulator is provided. Consideration should be given to purchasing a second, optional gas regulator to keep from requiring the regulator to be swapped each time to the MIG and TIG processes are changed over.

GIVE YOUR UNIT SOME SPACE TO COOL.

This unit needs room to cool itself and maintain proper duty cycle. Place the unit in a place that will allow 18" from all sides to allow for proper cooling. This welder/cutter combination unit pulls air in from the rear, and

Getting Started

pushes it through the unit's heat sinks to cool the electronics. The air is then exhausted through the front panel and side louvers of the unit. If any of sides is blocked or restricted, the duty cycle will be reduced, and overheating will occur, leading to possible damage if the restriction is severe enough. Never attempt to restrict air flow by attaching filters to the vents. Never modify the fans or circuits related to cooling.

CONNECT YOUR UNIT TO POWER.

Your unit has been shipped with a NEMA 6-50P plug. This is the standard plug used for 240V 1 Phase welders and plasma cutters in North America. For single phase 240V connection, select a NEMA 6-50 Receptacle for operation with this unit. (Other regions/countries vary). A neutral is not used. In a dedicated circuit, the wire wires supplying power (the conductors and ground) are black, white and green. A red wire, which is traditionally used as a "hot" leg (power conducting wire) of power is not present in a three-wire 240V wire circuit of a plasma cutter. For plasma cutters, from the panel box, the Black wire serves as L1(Hot), White serves as L2 (Hot) and Green serves as G (Ground). A Red wire will not typically be used as a conductor in a welder circuit. No neutral wire is needed, so white is used as a "hot" conductor wire in this instance. It is recommended to either install a receptacle as close to the main panel as possible or install a subpanel cutoff as close to the outlet and welder as possible. Always follow local codes when making these connections. **If you are using this unit in conjunction with a 240V air compressor, you must supply a separate, dedicated circuit for both. Do not share or piggy-back a circuit with this unit.** When 120V operation is required, simply connect the supplied 240V to 120V pig tail adapter. This adapts the unit from the NEMA 6-50 Plug to the NEMA 5-15 Plug to allow the unit to be used with 120V input without further modification of the welder. No wiring or buss bar changes are required. Once the unit is plugged in, it will automatically detect the new power and boot up in 120V mode. To verify 120V mode, the display screen will reflect the power input mode with one of the center tree information boxes displaying "120V". To change back to 240V input, shut the machine down, unplug the adapter, and reconnect to the 240V power supply. Turn the welder back on to reboot the unit back to 240V operation.

Standard Plug Configuration 1 Phase 240V

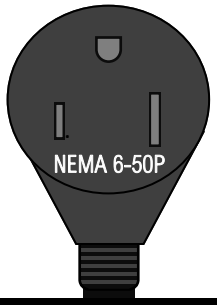

240V to 120V Pigtail Adapter (Supplied)

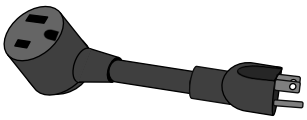

Pigtail Power Adapter
(NEMA 6-50R to 5-15P)

NOTICE:

There are special rules centered around wiring service for a welding machine. The National Electric Code under Article 630 has developed specific regulations for wiring electrical service for welding equipment. These are different than for other types of service such as a stove or dryer in a household or even in a commercial application. You need to consult and/or employ a locally licensed electrician before installing this unit to make sure all national and local codes are followed. Do not wire connections for this machine if you are not qualified. Everlast is in no way liable for any damages caused by improper connection of this unit. Your welder should be operated on a dedicated branch circuit not far from an electrical disconnect box. Importantly, it should not share circuits with other shop or household items. Do not attempt to "adapt" existing circuits because conductor (wire) colors are different for welders with 3 wire configuration than for an appliance with 4 wire operation. (Unless adapting with an approved adapter when being powered with a "clean power" generator.) No neutral is used in a welder circuit. The white wire is a conductor in a single phase plasma cutter service. The red wire is not used. ***The input power cable conforms to North American standards for size, length, with consideration given to inrush amperage, rated amperage and duty cycle. Do not modify, or attempt to rewire your unit.***

Selecting A Breaker and Wire Size

Select a breaker based off of the I_{1MAX} rating of this unit. This is the maximum inrush current of the unit. The inrush is not a sustained current. The I_{1EFF} rating of the unit is the maximum "rated" current of the machine. When combined with the length of the run from the main panel, this determines the conductor size. Refer your licensed, local electrician to Article 630 of the NEC and the specification page of this manual (or the specification grid printed on your unit) to select the correct breaker and wire size. A delayed trip breaker, or slow

Setup Guide

Getting Started

INSTALL THE AIR REGULATOR AND AIR COMPRESSOR.

NOTE: *Connect the clear hose to the air inlet at the bottom rear and to the regulator. Use the couplings and hose clamps found in consumable/parts bag to connect the tubing to the regulator and fittings. If missing, contact Everlast. Make sure the air flow direction is correct according to the markings on the regulator.* ***Do not overtighten the fittings. Lightly tighten the regulator securing nut to the bracket.***

The male air quick coupling that is supplied with the unit is a 1/4" industrial style connector. This connector is a common one in use in many small shops and home garages. Others may be substituted if this connector does not match the other connectors in use in the system. However, Everlast makes no provision for attachment of oversized couplings. The recommended minimum size of the air supply line is 3/8", up to 25 foot. If a longer line is needed, consider upping the size of the air line to prevent air pressure loss. If a larger air line is needed, make sure you have the correct adapters to fit the fitting on the unit. A smaller fitting at the unit's regulator/filter should not greatly affect flow, as long as the length of the restriction is kept to a minimum. The regulator comes in its own box in the packaging. It is fully assembled with the exception of a brass plug that is screwed into the middle opening onto the regulator. Usually this plug is installed, but due to the possibility of a change in manufacturing, the plug may be found in the consumable starter kit bag for the plasma cutter. *To adjust the regulator:* Pull up on the black cap until it clicks (approximately 1/8"). Turn the regulator clockwise to increase the pressure and counter clockwise to decrease the pressure. **Snap the adjustment cap back down to lock the regulator into position.**

Connect Air Regulator To Compressor And Unit.

NOTICE: The regulator bracket mounting location is located on the rear of the unit, under the power cord.

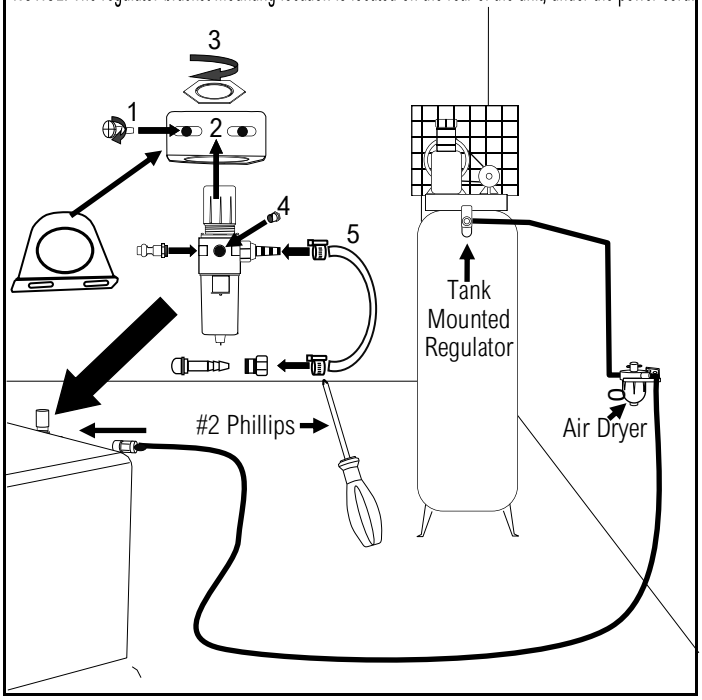

What do I need to be able to plasma cut?

The unit comes with everything you need as far as a basic starter kit for consumables, torch and regulator. However, you will need to supply a few things on your own.

1. You will need a suitable air-compressor and at least 3/8" supply line hose. 1/2" supply may be required for long distances. The input side on the regulator is the standard industrial 1/4" quick connect fitting. Suitable compressor sizes should follow recommendations found in the product specification recommendations. Oiless and pancake compressors are not suitable.
2. You will need to be able to regulate your pressure at the air compressor. Do not use the pressure switch on the air compressor to control the air pressure. A gate or ball valve installed on the air compressor is not enough. You will need an adjustable regulator which will control the air pressure at the tank. The regulator that you install on the unit is to be used to regulate actual cutting pressure. You need to be able to regulate the supply pressure down to 90PSI at the air-compressor.If you supply more than 100PSI to the cutter's regulator, you may damage the regulator.
3. You will need a separate air-dryer. Moisture is the enemy of any plasma system and destroys consumable life and eventually torches themselves. The regulator/filter included with the unit is not sufficient to remove moisture from the system. It is designed to trap particulates and slugs of water created by the coupling/decoupling process. A refrigerated system is not necessary. We recommend you look at the cartridge type systems that have replaceable elements for a budget alternative. If these are not available, consider having a replaceable paint-gun dryer mounted inline and monitor the moisture, and replace it often.
4. You will need additional consumables with different sizes to match the cut Amperage. The stock consumables are designed for use at the maximum amperage of the machine. The orifice in the plasma tip is specifically designed for a range of Amps. To see that range, check the plasma torch pages of this manual, and each tip diameter corresponds to a specified amp range. Lowering air pressure to try to compensate for lower Amps results in poor quality cuts and inconsistent arc behavior. Always match the consumable size to the Amperage being used. **NOTICE:** *For direct on-the-metal drag cutting, use special shielded consumables are available for most of the Innotec® iPT series torches.* ***However, limited drag cutting may be done under 30A with stock consumables, but consumable wear will be increased.*** *Since Everlast does directly manufacture the plasma torches, every consumable configuration for every torch may not be stocked or available. For these or other special applications, consult OEM distributors of the iPT/PT/PTM series torches in the North American Markets.*

Setup Guide

Getting Started

CONNECT YOUR UNIT TO THE CORRECT SHIELDING GAS.

What Shielding Gas Should Be Used?

The Hurricane 220 MTS-C is a synergic unit which incorporates the type of gas and metal wire being welded with as a base to make accurate "PowerSet" settings. It is important to pay attention to the type of gas used while in "PowerSet" mode or the unit may not determine an accurate setting. The following gases should be used and are the best choices in the gas selection during initial setup after powering the unit up:

MIG:
Steel*: 75%/25% Ar/CO_2 (75/25 or C25) OR 100% CO_2 (C100)
*Axial Spray begins around180A with .035" 90%/10% Ar/CO_2 (90/10 or C10) This capability is limited on this machine due to max Amps.
Stainless (Inox): 98%/2% Ar/CO_2 (98/2)
Aluminum: 100% Ar (Argon)

TIG:
All Metals: 100% Ar (Argon)

Notice that Steel has a couple of gas choices. *In the North American Market, 75/25 is the standard gas choice for short circuit MIG*. It provides less spatter than CO_2 and a cleaner, less oxidized weld in general. 100% CO_2 is cheaper, but can require more cleanup and descaling after the weld is completed. In other markets, 100% CO2 is more commonly available, or may offer slightly different combinations. If 75/25 gas mix is not available for use with the PowerSet setting, and 80/20 is an option, then this gas may be used on the 75/25 setting, but may require slight tuning to achieve perfect performance.

Stainless gas mixes can range throughout the industry. However, in the industry. this unit is designed to be used with 98/2 Ar/CO_2 blend when welding Stainless Steel. While there are other gas choices, such as "TriMix" this is typically the most widely available and economic one for welding Stainless Steel (Inox).

Aluminum will always require the use of pure Argon (100% Ar) shielding gas while welding in MIG mode. This is a widely available and a standard gas throughout the world.

Of course, if you choose manual mode, different gas mixes other than what is suggested may be used. If you choose to use a different gas, be sure to select the next closest gas on the panel during setup that matches your selection and keep "PowerSet" turned off. This will allow proper operation.

Always wear safety glasses when changing a cylinder. Before installing any cylinder, stand to the site of the valve, away from the discharge, and quickly open the cylinder to give it a quick blast. This will dislodge any dirt or particles stuck in the valve or the connection seat. This will help reduce the chance of dirt particles making its way into the solenoid valve, causing sticking issues later on.

Connecting your cylinder will require a cylinder wrench (1 1/16")to connect the regulator to the cylinder (North American Cylinders with a 580 CGA valve). If you do not have a cylinder wrench, an adjustable type wrench will work, but make sure it is properly adjusted to prevent rounding of the fitting shoulders. Do not use pliers, or a serrated-jawed wrench such as a pipe wrench or basin wrench to tighten the fitting. The design of the fitting means that no thread sealing tape or compound needs to be used.

Connect the regulator tubing to the regulator. The regulator may be supplied with a hose barb connection, or a threaded connection for the tubing. If the regulator supplied has a hose barb, make sure the hose barb fitting is tight on the regulator. Tighten with a 3/4" (19mm) wrench. If it is a threaded connection, use two 3/4" (19mm) wrenches to hold both the regulator and the tubing connection at the same time. Hold counter pressure on the regulator connector while tightening the hose fitting to prevent damage to the regulator and to ensure maximum sealing. After connecting the tubing to the regulator, connect the other end of the tubing to the 5/8" CGA fitting on the unit. Hold the fitting on the unit with one 3/4" (19mm) wrench firmly while tightening the hose fitting with another 3/4"(19mm) wrench.

Important: Do not use thread tape or pipe sealant on any cylinder, regulator or unit connection. The residue and debris may get into the gas solenoid and cause operational issues.

CAUTION!

Do not tighten the rear unit connection without holding the female 5/8 CGA fitting located on the unit with a wrench, or damage may occur to the bezel and the fitting as the fitting may turn in the housing while the hose fitting is being turned.

Connect Regulator To Cylinder And Unit.

Note: Some regulators may have a hose barb connection fitting on the regulator.

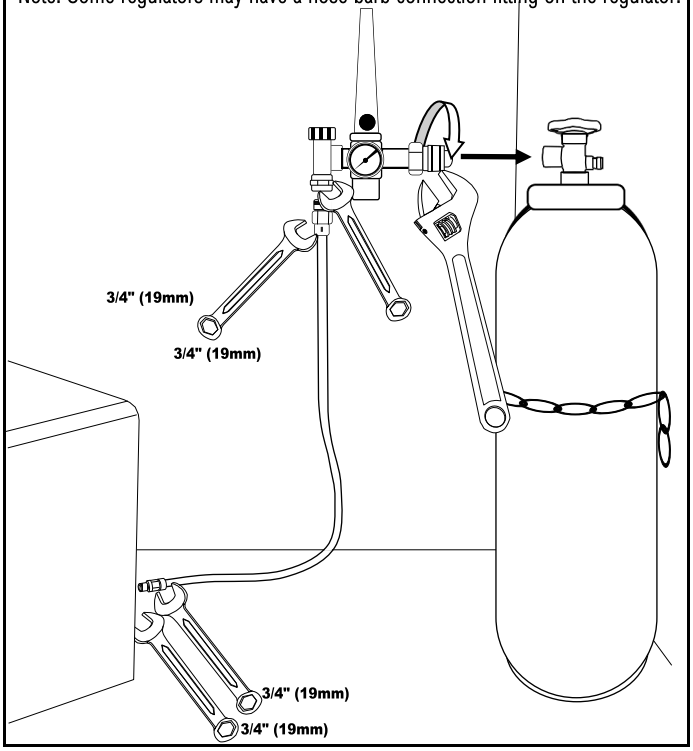

Setup Guide

Getting Started

CHECK FOR GAS AND AIR LEAKS.
Be sure to check for gas or air leaks before attempting to weld or cut. Connect all the lines and tighten and recheck any related clamps, plugs and fittings. If you hear or suspect leaks, use warm, soapy water (or a dedicated leak testing solution available from welding suppliers) and spray on all rear external connections. If any leaks are present, bubbles will form around the area of the leak. Tighten any clamps or fittings found to be leaking. **If the MIG gas regulator is leaking, discontinue use and contact Everlast technical support. Do not attempt to modify or repair this regulator.** If the air regulator is leaking, make sure the pressure is not more than 90 psi, and tighten the small screws on the regulator with a screw driver. If too much pressure is applied, the regulator may have blown internal and external O-rings or seals. If it is the air regulator, check and remedy the problem if the regulator persists in leaking. If it is the gas regulator, discontinue use and contact Everlast. If the problem cannot be remedied, or internal leak is suspected contact Everlast. **NOTICE:** While plasma cutting, a small drop in set air pressure and operating pressure (while cutting) is normal. This does not indicate a leak. This drop should never be more than 4 to 5 psi and is usually less than 3 psi. If the pressure drops more than this, this usually indicates the air supply hose for the plasma function is too long or too small in diameter for the length it is running before reaching the unit. It may also indicate another restriction. Always keep the air supply hose as short as possible.

DISTANCE YOUR WELDER FROM YOUR WORK.
As a best practice technique, be sure to locate your welder away from the immediate work area. Sparks and debris thrown by the welding and plasma cutting processes can enter the unit and cause damage. This includes any grinding or milling operations that may occur in the area.

WARNING!

Make sure plasma torch polarity is correct or damage and malfunction of the torch and machine may result! Remove the torch before changing to another mode. Install the other torch *after* the mode is selected. **Do not attempt to weld or cut while the unit is in a mode that is not supported by the connected torch!** Do not leave the plasma or stick torch connected while using another process. The MIG torch *may* be left connected if the torch is isolated from contact with metal. If the MIG torch must remain in place, a piece of rubber tubing slid down over the (cool) MIG torch nozzle will help prevent accidental contact and arcing of the torch when not in use. As a best practice, remove the MIG torch when not being used for MIG or Flux-Cored welding. Accidental cross-arcing can cause the machine to fail.

Never touch a bare or exposed part of the connectors, cables, or consumables while the unit is in use, especially while in the plasma cutting mode. Turn the machine off to replace or check plasma consumables. Severe injury, burn or electrocution may occur if contact is made. Keep all cables and covers in place and in good repair. Do not operate if damage occurs to any cable or safety device. Discontinue use immediately and contact Everlast for replacement or repair of the affected part.

The on screen programming will remind you what polarity to use, but in case you forget, refer to the illustrations below.

Where Do I Connect The Stick Torch?

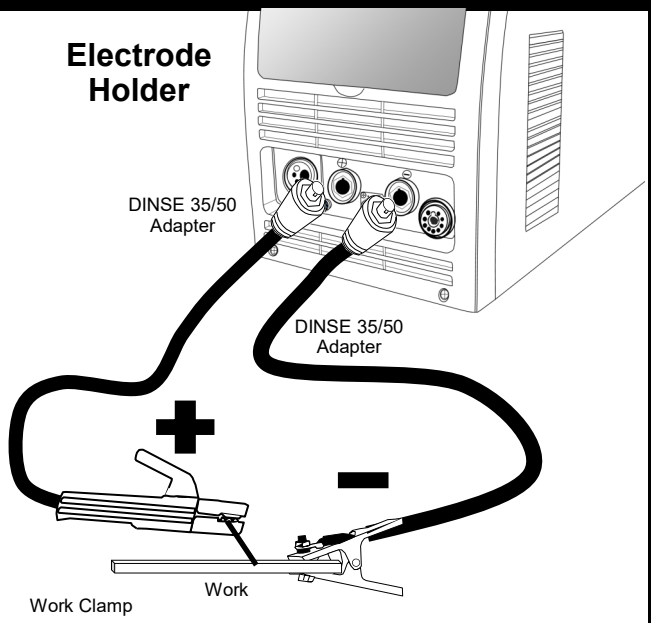

For most all applications, connect the electrode holder to the positive terminal. Connect the work clamp to the negative terminal.

Where Do I Connect The Plasma Torch?

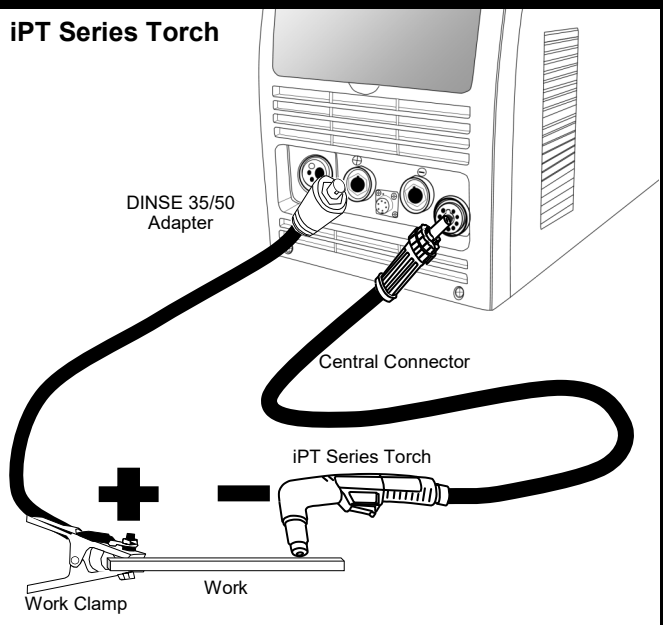

Connect the work clamp to the positive terminal. Connect the plasma torch to the negative terminal. Make sure the central connector is fully seated and the connector locking ring fully tightened by hand.

Setup Guide

Getting Started

SELECT THE CORRECT MIG AND FLUX-CORED POLARITY.

Even though similar in concept, MIG/MAG (GMAW) and Gas-less Flux-Cored (FCAW) welding require a polarity change when transitioning between the two. The unit will remind you with an on-screen prompt to change polarity when you change between the processes, but this is an often over-looked issue, even when reminded by the machine. Failure to change polarity will result in erratic operation, bird's nesting of the wire, poor fusion and excess spatter. Use illustrations below as a guide.

How Do I Change Polarity For MIG?

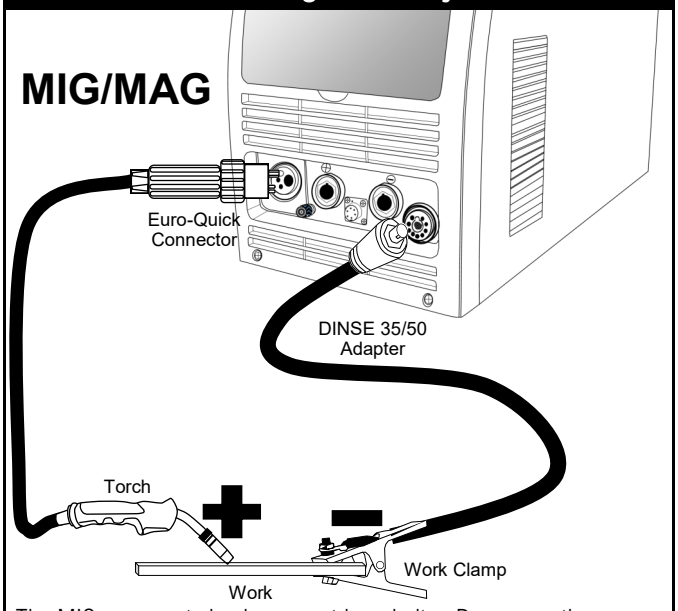

The MIG gun must also be correct in polarity. Drop open the cover on the left side of the MIG to access the wire spool and feeder. Just above the feeder, the are two terminal lugs. The upper is Positive, and the lower is negative. If there are no positive (+) or negative (-) symbols, there may also be a label that says "Gas MIG" and "Gasless" or something similar. Regardless, the top terminal is positive and the bottom terminal is negative. For MIG, the wire feeder cable should be connected to the top, positive (+) terminal with via the provided screw. See below.

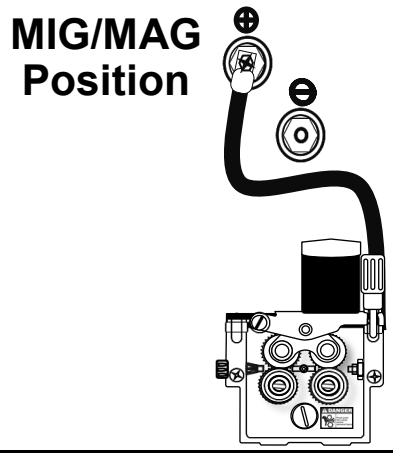

How Do I Change Polarity For Flux-Cored?

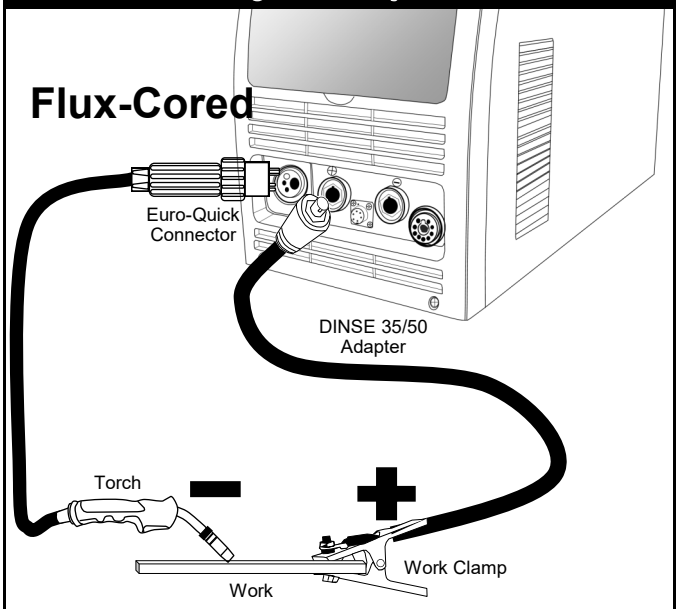

When welding most all flux-cored wires, polarity will be negative. There are a small number of exceptions. However, if the manufacturer doesn't state the polarity, assume it is negative. Drop open the cover on the left side of the MIG to access the wire spool and feeder. Just above the feeder, the are two terminal lugs. The upper is Positive, and the lower is negative. If there are no positive (+) or negative (-) symbols, there may also be a label that says "Gas MIG" and "Gasless" or something similar. Connect the wire feeder cable to the bottom terminal lug via the provided screw.

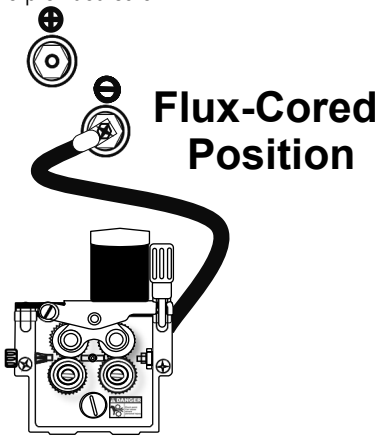

NOTICE:

This unit is not designed for or intended to be used in dual shield operation (FCAW-G). The Flux-cored operation that this machine supports is a gasless process (FCAW). The PowerSet and manual function is programmed for this type of operation.

Setup Guide

Getting Started

INSTALLING THE OPTIONAL SPOOL GUN.

The Parker DSP 360A Spoolgun is recommended for use with this unit and provides the best duty cycle and amperage rating. The SM200N may also be used but is rated for an Amperage and duty cycle that is lower than the machine, which may lead to shortened gun and consumable life.

Where Do I Install The Spool Gun?

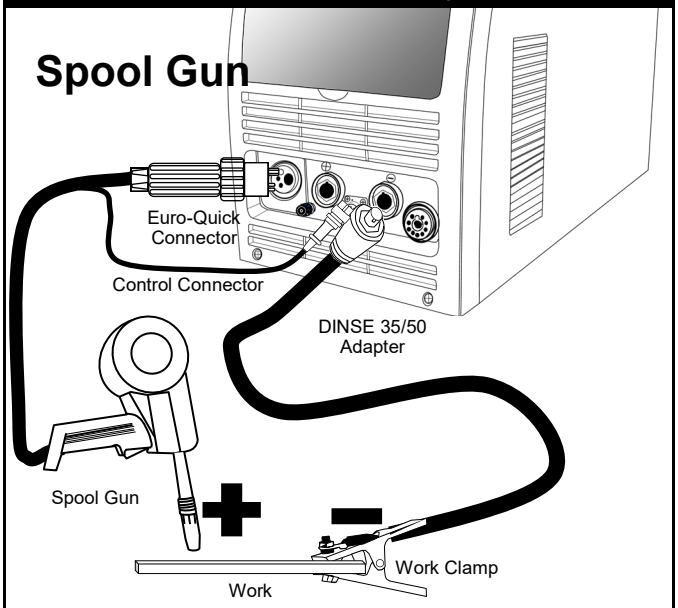

The spool gun connection process is similar to the MIG torch connection and uses the same Euro Quick Connect connection. Polarity is the same as MIG except when Flux-Cored wire is being used.

How Do I Select TIG Polarity?

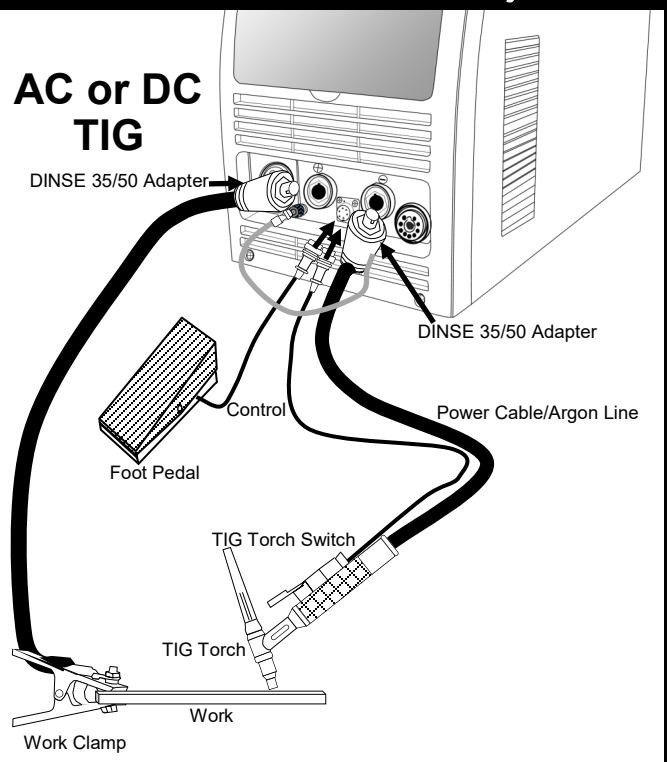

NOTICE: Choose between the torch switch operation (2T/4T) or the foot pedal operation. Both cannot be connected or used at the same time.

SELECT THE CORRECT TIG POLARITY.

TIG polarity will always remain constant, regardless of whether you choose AC or DC operation. The torch polarity will always be negative. This means the work clamp will be installed in the positive terminal. If the polarity is reversed the tungsten will be rapidly consumed and wasted. If the polarity is reversed in AC, it is possible that it may work if the AC balanced is focused the wrong direction. This may not be noticeable right away. But arc starts will be harder since the HF start arc is coming from the wrong direction. It can cause welder overheating in the long run. If TIG welding near or over 200A is expected for long durations of time, it is advised to purchase a water-cooler and a separate 18 or 20 Series water-cooled torch. The water cooler will plug into the rear of the welder so the two can be used in tandem and the welder can be used to switch the cooler on and off at the main power switch in the rear of the welder. Consider the PowerCool 300 (not stackable) or the PowerCool 400 (stackable) for this welder.

WARNING!

Keep all caps and covers in place while not in use. For example, install the cap over the Euro MIG connection when the related process not in use. This protects the fitting and protects against accidental contact which may result in severe injury or shock. The connections may remain live during use with other processes. Disconnect any unused torch or clamp when other processes are in use or damage may occur to the machine.

Setup Guide

Getting Started

CHECK AND CHANGE YOUR DRIVE ROLL.

The unit comes equipped with .030" and .035" drive rolls and 4 roll .

NOTICE: *For most purposes up to 3/16" thick material you will likely want to use .030" wire in this unit since it covers the greatest range of metal thicknesses and amperages within the capability of this unit. .030" wire typically can handle up to about 160A before it transitions to globular transfer.* For upper range use and materials 3/16" and over, .035" is advisable. Remember, if you change wire size or type, you will need to either flip the lower drive rolls over or completely change the drive rolls to the correct size and type.

The top drive rolls are actually an idler rollers used to hold tension and keep the wire in the groove and is not changeable. Only the bottom drive roll needs are changed. The bottom drive rolls have two small grooves that are sized for .030" (.8mm) and .035" (.9mm) solid wire. Additional sizes and types of drive rolls are available as options. The standard installed drive roll is meant to feed hard (solid) steel wire. The groove on this drive roll has a "V" shape designed for the solid wire. A Flux-Cored drive roll has a serrated edge to the groove, which grips the softer, cored wire. Viewing a flux-core drive roll from the top, you will see a "zipper" like pattern. This should never be used to feed hard steel, stainless or aluminum wire. This will result in damage to the wire, metal flaking and possible plugging of the MIG gun liner. To determine the exact size of wire and type you have, look at the side of the drive roll. The size of the drive roll groove is stamped on the side of the drive roll closest to the corresponding groove. The type of the drive roll will also be stamped with a V if it is for solid, hard wire. If it is stamped with an "U", this is a special drive roll for feeding aluminum wire (Aluminum needs a special polymer type liner for feeding with the U-groove drive rolls.) "K" or "X" signifies a flux-cored drive roll.

The drive rolls are held in place by slotted metal thumbscrews. Remove the screw to expose and change the drive roll. The drive rolls are mounted on bushings. The bushing should be held in place with one finger of one hand while the other hand removes the drive roll. This will prevent both bushing and drive roll from being removed from the wire feeder drive shaft. When removing,make sure that the square locating key is not dismounted. If the key falls out of the keyway, replace it before replacing the drive roll. Install the drive roll with the size stamp facing the inside.

Drive Roll Size and Location Info

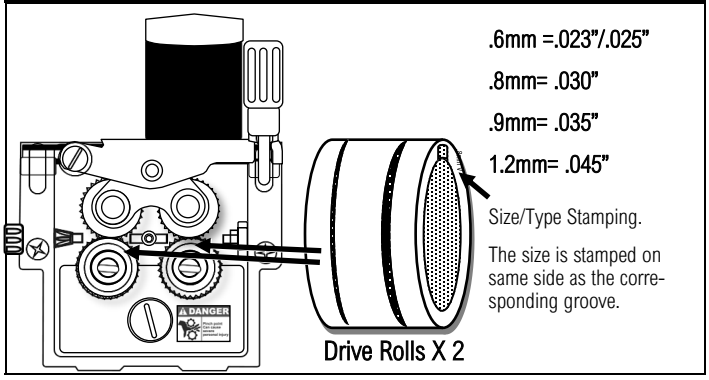

INSTALL THE WIRE AND FEED THE GUN.

Once the wire spool has been installed, flip the tensioner lever down and raise the top drive roll to the upper position. See the illustration below. Gently guide the wire from the spool over through the wire feeder and into the front section of the gun at least 6 inches. Make sure the wire lays neatly in the groove. Hold it with your finger if necessary as you lower the top drive roll down and raise the tensioning lever with your other hand. When complete the wire should look like the illustration on the previous page. *Hint: The wire on the spool is usually bent and threaded through a small hole in the side of the spool to lock it in place and prevent de-spooling of the wire. Keep one hand on the wire spool to prevent despoiling and cut the wire loose with a pair of wire cutters. Trim the wire to make sure the end of the wire is straight and able to be threaded through the wire feeder mechanism and gun.* After the tensioner is lowered back to the horizontal position, check to confirm the wire is still in the groove and is not riding up on the shoulders of the drive roll.

Installing the MIG Wire

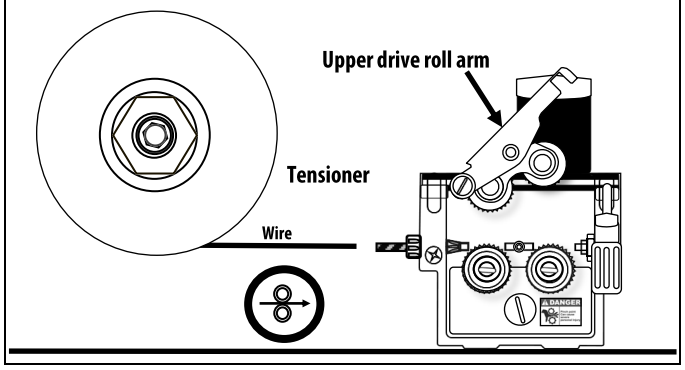

Next, turn the welder on and set to a desired MIG or Flux-Cored mode. Remove the gas nozzle. *Twist clockwise to aid removal if needed.* Unscrew the contact tip as shown in the illustration below. Hold the gun cable and gun straight as possible. Press and hold the wire jog button. The wire should slowly begin to feed through the gun cable and eventually through the gun. As the wire exits the gun, allow 3 to 4 extra inches of wire to be fed out past the diffusor. Release the wire job button. Re-install the contact tip over the wire and screw it in clockwise until it is tight, but not to the point of stripping. Re-install the gas nozzle.

How Do I Disassemble the MIG Gun?

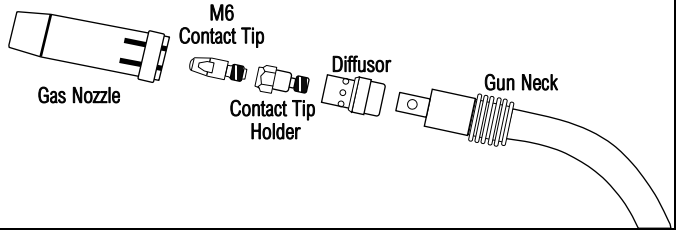

Setup Guide

Getting Started

TRIM THE WIRE AFTER INSTALLATION.

Trim the wire sticking out of the nozzle to 1/4" to 3/8" (6mm to 9mm) in length with wire cutters. See the illustration below. The gun is now ready for welding. *Hint: Always make sure that you re-trim the wire before beginning a new weld if the wire is not already trimmed to this length. This will help to improve arc restarts.*

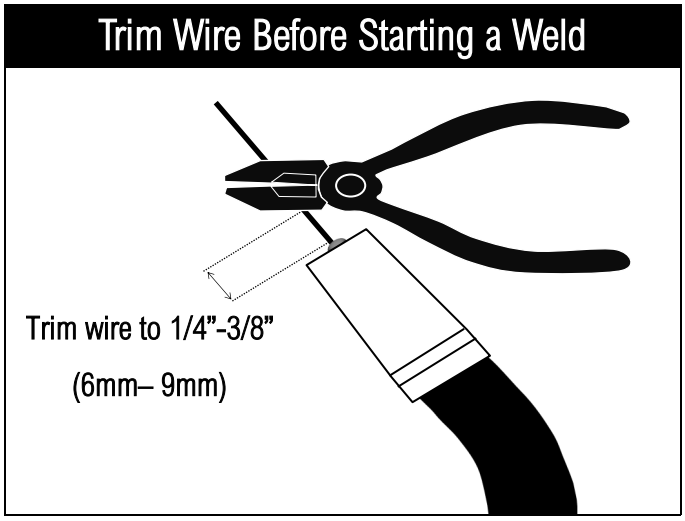

PROPERLY TENSION THE WIRE FEEDER.

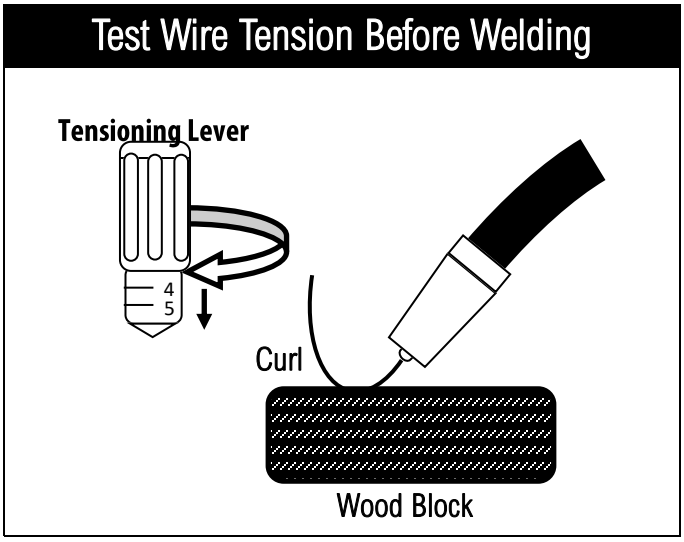

To feed properly, the wire needs to be tensioned before you begin welding. The tensioning lever has numbers on the dial. To increase tension, rotate the tension lever clock-wise. Different types of wires require different tensions. There is no exact tension that works for all wire types. However, for steel wire, you will generally tension to at least 3 on the dial. For flux-cored wire, and aluminum, it may be only two or three. Wire diameter also plays a small part in the amount of required tension that is needed. Regardless of the wire type or wire diameter, observe the following information and refer to the above illustration.

To Tension the drive roll and check for proper wire feeding:

- Turn the unit on and pull the trigger so that the wire extends approximately 1" beyond the gas nozzle.
- Find a small block of wood, such as a two by four, and secure it to the welding table or other solid object.
- Caution: Do not test this on the weld metal or on the work table or accidental arc flashing/starting may occur! Do not direct the wire into hand! Injury may occur.
- Hold the gun approximately 2 inches off the wood. Aim the gun at the block of wood so that the nozzle is at a 30 degree angle to the wood.
- Pull the trigger and allow the wire to contact the block.
- Increase wire tension so that the wire contacts the block of wood and is forced to curl up. Continue holding the trigger so that two or three full spirals are made.
- If the wire stops, or stutters during this process, let go of the trigger immediately and increase tension.
- Adjust the wire until the stuttering or jerking disappears.
- Do not over-tighten the tensioner or use more tension than necessary. When the wire begins to curl without any stoppage, correct tension has been achieved.

Component Identification and Explanation

Front Panel View

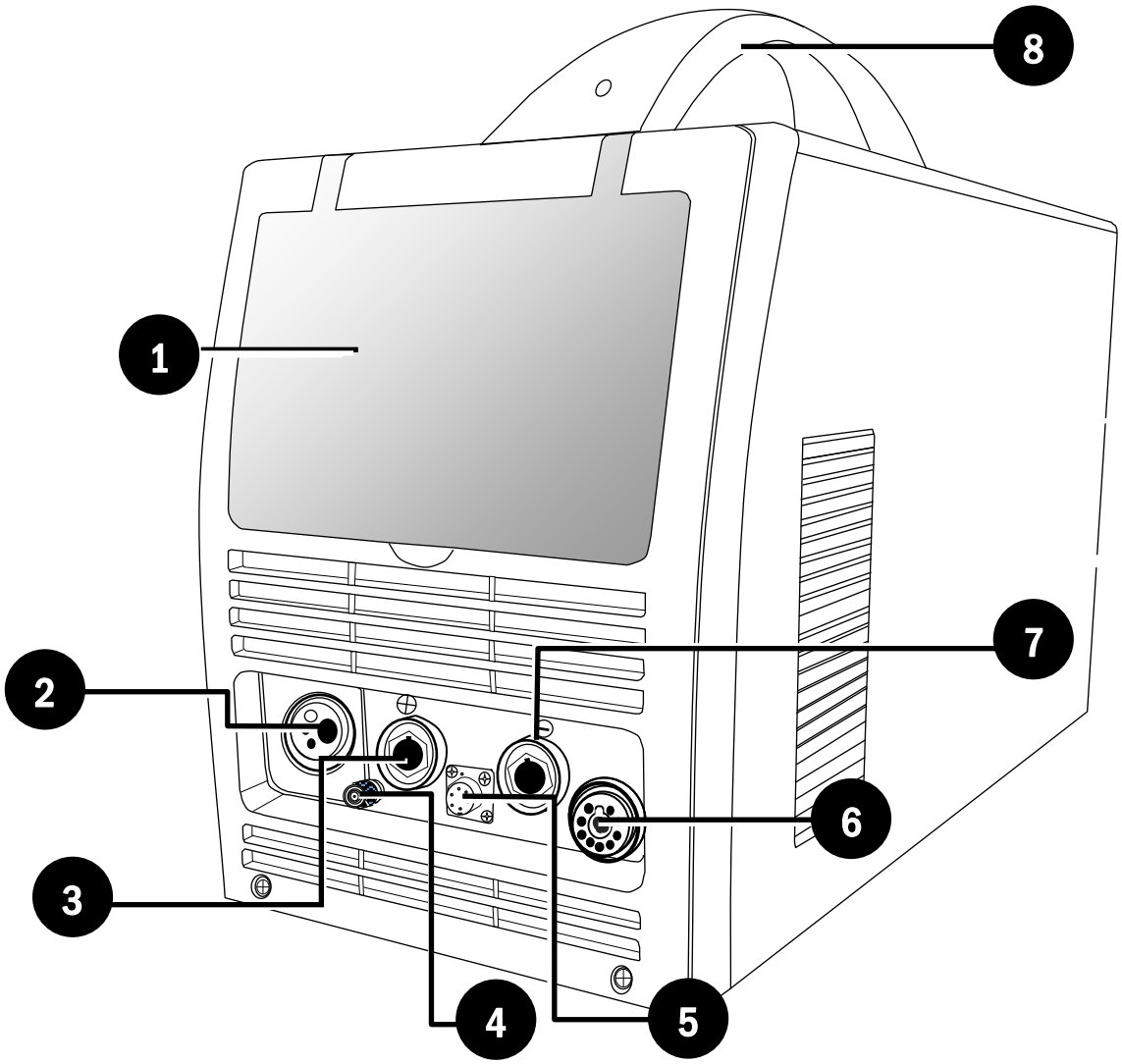

Number	Component Identification	Component Note
1	Protective Cover	Keep cover down and in place during welding activities and in storage.
2	Euro-Style Quick Connector	Connect to the MIG gun or Spool Gun. The MIG gun and the spool gun share the same connection.
3	Positive Terminal (+) DINSE 35/50 Type	For Stick, connect to the Torch. For MIG, this remains vacant. For Flux-Cored connect the work clamp. For Plasma connect the work clamp. For TIG connect the work clamp.
4	Quick Disconnect Connect Coupling	Connect the TIG Argon gas line from the torch directly to this line.
5	Control Connector	For Plasma the torch switch wire connects here. For the Spool Gun, the control circuit wire goes here.
6	Central Connector	Connect the Plasma cutter torch to this connector. This is an all-in-one fitting that provides air, power and pilot arc to the plasma torch.
7	Negative Terminal (-) DINSE 35/50 Type	For Stick connect to the work clamp. For MIG, connect to the work clamp. For Flux-Cored, this remains vacant. For Plasma, connect to the torch.
8	Handle	Install handle with provided screws. If it is not desired, leave handle off the welder and install provided screws directly to the top.

Component Identification and Explanation

Rear Panel View

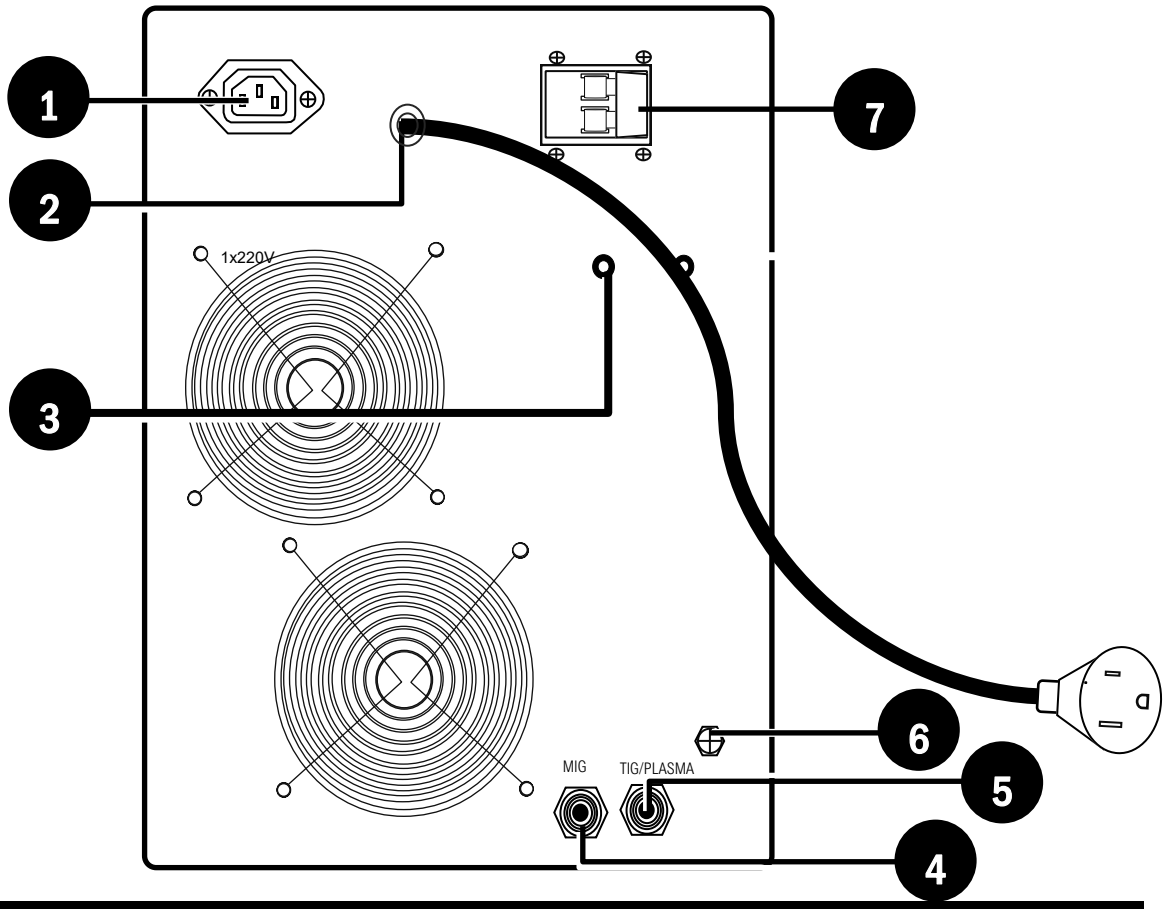

#	Component Identification	Component Note
1	240V Cooler Plug (Some Models)	Do not use unless a cooler is added. This plug should never be used to power any other item than an Everlast Water Cooler. It is a low amperage outlet designed only for water cooler use.
2	Input Cable and Plug NOTICE: Always consult national codes and a local licensed electrician before wiring this welder to any service.	*North America only:* The unit may be operated on either 208-240V 1 phase (or on 120V 1 phase with the included pigtail adapter). North American standards require only 3 wires for 1 phase operation of welders. A neutral is not used or required. **For wiring a 1 phase connection to the unit:** Use Black for L1, White for L2, and Green for ground (not neutral) use. Red is not typically used in wiring a welder/plasma cutter circuit. This is in accordance with North American codes for welder/plasma cutter wiring (see Article 630 of the NEC for more infoWhen operating on 120V, the white wire (internally) becomes the neutral, and the green still serves as the ground. *The supplied NEMA 6-50P is the proper plug used for wiring single phase 240V welders and plasma cutters in North America. It should not be changed or removed unless wiring directly into a cut-off switch. Other regions may vary and may have a different plug type or no plug at all.* **Use the supplied adapter to convert to 120V operation.**
3	Air Regulator Bracket Screw Holes	The air regulator bracket supplied in the kit is mounted to these two holes. Mount bracket first.
4	MIG inlet connector (from regulator)	5/8" CGA.
5	TIG/Air Inlet Connector (from regulator)	5/8" CGA The air for the plasma and the TIG gas are shared. The connection is only able to be used for one gas at a time as equipped. An aftermarket inert gas flow valve and 5/8 CGA fittings may be sourced locally or online to allow both to be connected simultaneously if desired, however Everlast does not supply these fittings or offer kits to do so.
6	HF Ground Service Bolt	Used only to mitigate any electrical interference caused by the operation of this unit (if any is found).
7	Breaker/Power Switch.	This switch doubles as the main power switch and disconnect switch. If this switch trips and the welder power turns off, a significant internal event or failure of the switch *may* have occurred. If this occurs, immediately remove from service and mark/tag according to regulations and contact Everlast Tech Support for further diagnosis and/or repair options.

Component Identification and Explanation

Control Panel Layout



	Component I.D.	Component Note
1	Process Selector	Use the left and right arrow keys (◄ ►) to select the desired welding or cutting process.
2	Display	This color LCD display provides all the information relative to setting the machine and indicating set parameters.
3	Left Adjustment Knob	The left adjustment knob is used change the desired status of a function (i.e. voltage, turn on/off, electrode type, thickness etc.) and to set all adjustable values to the left side of the black dividing hash mark just above the "EVERLAST" logo. If you push in on the knob while adjusting, it will adjust in larger increments, usually in whole numbers or increments of 10.
4	Left/Right Dividing Mark	This mark divides the functions between left side control functions and right side control functions of the machine. The left side adjustment knob and navigation buttons control the left side of the machine. The right side adjustment knob and navigation buttons control the right side of the machine.
5	Gas Purge	This control activates the free flow of shielding gas/cutting gas to allow the regulator flow rate to be set accurately. This avoids "live" firing the unit with the torch trigger to activate the gas flow.
6	Wire Jog	When this button is selected, the wire is fed wire through the machine to assist in threading the wire through the drive rolls and into gun without pressing the trigger and wasting +shielding gas.
7	Left Side Navigation	Use the up and down arrow keys (▲▼) to navigate and select the parameter on the left side of the hash mark that you wish to change or adjust. The actual direction may go either up and down or left and right, depending upon the function level you are adjusting or selecting.
8	Program/ Save/Recall	This unit features a programmable memory so programs can be saved and easily recalled. To use, first select the process you wish to save, and setup the program as desired. When completed, quickly press and release the Program "PRGM" button once to access the save menu. Use the navigation buttons on either side to select the side and program number of the menu that you wish to save. Once selected, press and hold the "PRGM" button for 3 seconds. The program will be saved and the program will automatically be named by the primary settings that distinguish the program. Press the button quickly again to exit, or allow several seconds to pass without adjustment and the machine will automatically return to the settings menu. To access any program, press and release the button, then navigate to the desired program and quickly press and release the program once again. Don't forget to Record this program number for your records in a data/log book for easy access.
9	Right Side Navigation	Use the up and down arrow keys (▲▼) to navigate and select the parameter on the left side of the hash mark that you wish to change or adjust. The actual direction may go either up and down or left and right, depending upon the function level you are adjusting or selecting.
10	PowerSet	When selected, PowerSet enters a synergic mode which gives automated settings based off of the diameter of electrode, type of metal, type of gas, and thickness you input into the unit. This simplifies operation and reduces the knowledge base needed to make the correct adjustments needed to weld properly. **When PowerSet mode is selected, some functions of the machine will be set to automatic and will not be adjustable.**
11	Run-in	When selected, the Run-in function feeds the wire slowly until the arc is started. This creates a smoother start, and reduces spatter and arc start stuttering, which is also commonly referred to as "Machine Gunning".
12	Right Adjustment Knob	The right adjustment knob is used change the desired status of a function (i.e. Wire Speed, Amperage, Spool-gun operation etc.) and to set all adjustable values to the left side of the black dividing hash mark just above the "EVERLAST" logo. If you push in on the knob while adjusting, it will adjust in larger increments, usually in whole numbers or increments of 10.

Component Identification and Explanation

Getting Ready To Weld

GENERAL INFORMATION ON SETUP AND USE.

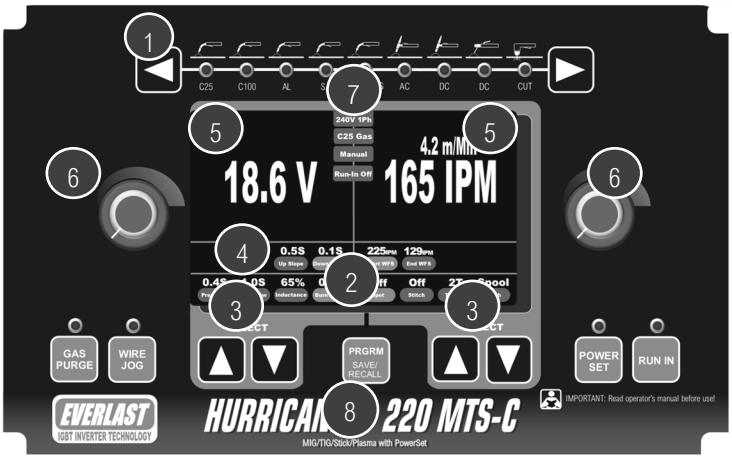

Selecting the Process.

At the top of the panel **(1)** the process selector is used to select the desired welding or cutting process. Use either the right or left arrow (◄ ►) buttons to advance to the next process. Pressing the left or right arrow button rapidly will require the button to be pressed twice to move to the next process. The initial press of the arrow button will display the polarity screen for the next process. A rapid second press abbreviates the polarity screen (see next page) and allows you to enter directly into the setup screen for the process selected. A third rapid press advances to the next process polarity screen. However, if you advance slowly or decide to move to the next process after the machine has had time to automatically advance to the setup screen, it will only require one press to advance to the next process. If you accidentally pass the process you wanted, instead of cycling back through all the processes, simply use the opposite arrow button to scroll back to the process you desire.

Navigating the Menu.

The panel is divided in half by a black hash-mark **(2)** below the screen and a green vertical bar down the middle of the screen. This divides the control region in half. The left side up and down **(3)** arrows (▲▼) controls the left half of the screen and the right side up and down arrows (▲▼) controls the right half of the screen. Both functions *(items that may change in status, such as ON/OFF, or Gun Selection),* and parameters *(items that change in value in a range such as inductance percent)* are selectable with the arrow buttons. The arrows are used to scroll through and highlight the selected function or parameter. When a function or parameter is selected and available for adjustment, it will be highlighted and change color, turning from gray to green **(3).** In some modes, to avoid confusion, the general area that is navigated to will flash as well. Default selection will always be the main adjustment on that side *(Volts/Amps/Wire Feed Speed etc.)* **(5).** When navigation is in default mode, the main parameter will be brightly lit in white (or green for voltage in stick, see stick setup section). When navigating away from the default parameter area, the large white numbers will appear to dim. After 4 to 5 seconds if you haven't made another selection or made an adjustment to the function or parameter selection, the machine automatically defaults *back* to the main parameter area and the numbers will brighten and will be able to be adjusted. Of course, if you continue to navigate completely through the left or right side functions and parameters, you will eventually cycle back to the default parameter area (voltage, wire speed, amperage etc.) and the numbers will brighten to indicate that you have fully cycled through all the parameters and returned to the default. **NOTE:** *If a parameter or function* ***(4)*** *has a black background (* STD. *) this function or parameter cannot be selected, changed or adjusted due to the mode or setting you selected (i.e. PowerSet) the function is either not relevant or is automatically set by the machine.*

Changing the Functions and Adjusting the Parameters.

To change the status of a function or adjust the value of a parameter, use the left or right up and down arrow keys (▲▼) to navigate and highlight the desired function or parameter. Then, use the left or right control knob **(6)** to make the change in function status *(change from OFF to ON, or change torch type, etc.)* or change in parameter value (increase or decrease the amount of seconds or percentage etc.). As a default, without navigating to the desired function or value, the left and right control knobs will be used to adjust the Voltage, IPM, or Amperage. **NOTE:** When in Stick mode, the left display will display voltage, but due to the nature of constant current stick welding, voltage is not adjustable and is controlled by the arc length.

Observing the Important Information.

At the top center of the machine **(7)**, the welder will display important reminders to change gas, or which process is being used. It will also tell you, in case you forget, whether you are in manual or PowerSet mode. The input voltage is displayed as a confirmation and reminder of the correct input voltage. Run-in status is also displayed as "Run-in On" or "Run-in Off".

Why Are Some Settings Limited or Blocked?

There are two basic reasons some settings are limited in adjustment or completely blocked from adjustment. The first is that the unit is being used on 120V and output is limited. With limited output, the machine must limit certain range of adjustments to protect itself from malfunction. In PowerSet mode this is obvious by the limit on selecting electrode or thickness sizes. The second reason is that the machine is in PowerSet mode and is automatically presetting the unit for you. In manual mode, most all functions are available for adjustment with the exception of stick mode which does not allow electrode selection.

Saving a Program.

To save a program, the welder should be set to desired parameters. Once desired parameters are set, press and release the PRGRM/SAVE/RECALL buttton **(8)**. When the save screen opens, use the corresponding left or right up and down arrow keys (▲▼) to navigate up and down to the desired program number. When the desired number is highlighted, press

Component Identification and Explanation

Getting Ready To Weld

PRGRM/SAVE/RECALL button to return to the program screen. Use the navigation buttons to highlight the desired program. Quickly press and release the PRGRM/SAVE/RECALL button to recall and open the program. If the program needs to be fine tuned, the settings may be adjusted or changed while in use. However, if changes are made to the program, unless the program is resaved, these settings will not be automatically saved to the program. To save the changes, repeat the save program steps.

IMPORTANT: When recalling a program, do not press and hold the button or the program may be erased or saved over with the current settings of the machine. Simply press and release the button quickly.

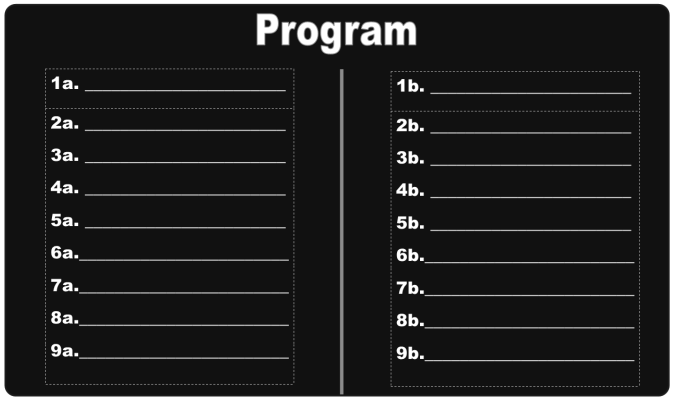

NOTICE:

The unit is designed with several features and functions in common between welding processes. The principles of setup and operation carry over from one process to another. In this case, information may not be repeated in as much detail in this manual if it has been discussed previously in another process.

Component Identification and Explanation

Setting the Unit Up for Welding/Cutting Manually

The Welcome/Boot Screen



When you first turn the unit on with the rear power switch, this screen will greet you as the machine begins the boot process. Simultaneously, all the process selection LED's should be lit on the control panel.

The Polarity Screen

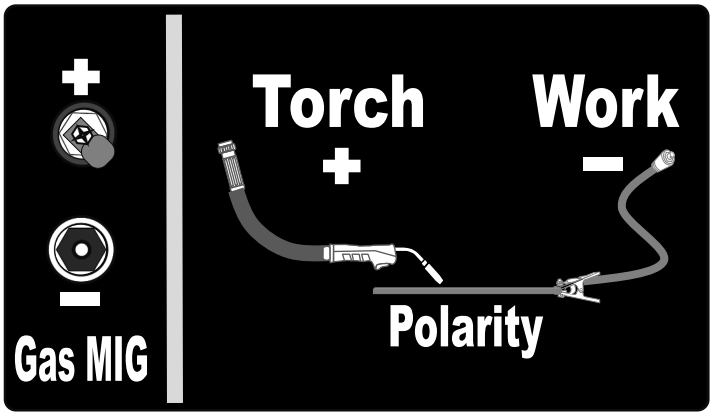

After the boot process (2 to 3 seconds) completes, the unit will briefly display a polarity reminder screen (4 to 5 seconds) as depicted above. Simultaneously, the welder should highlight the last process used by lighting one corresponding red LED at the top of the panel in the process selection area. **NOTE:** In the left column of the screen, during any wire feeding mode, the unit also reminds you to check and change your polarity connections of your wire feeder, indicated by the terminal lug and blank terminal. A reminder to use gas (MIG), or not to use gas (Flux-Cored) is also displayed for wire feeding modes. MIG will also display a "Run-In" indicator for slow wire start for improved starting if selected. For Stick, a similar polarity reminder appear as well. It's especially important to check and change your torch and work clamp polarity or improper operation and even damage to the machine may occur. As a best practice, keep the torches disconnected until the polarity screen displays to prevent damage to the machine. Also be sure to remove the torch before changing polarities. Do not try to operate the machine with more than one torch connected at a time.

If desired, at this point you may change the process by using the up/right arrows (◄ ►) at the top of the panel to select the desired process. Be sure to wait until this screen is present before you attempt any change of the welding process. Any time you change processes, the screen will reappear briefly to remind you to make any required changes to polarity.

THE MAIN CONTROL SCREENS (MANUAL MODE)

The MIG/Flux Cored Manual Screen

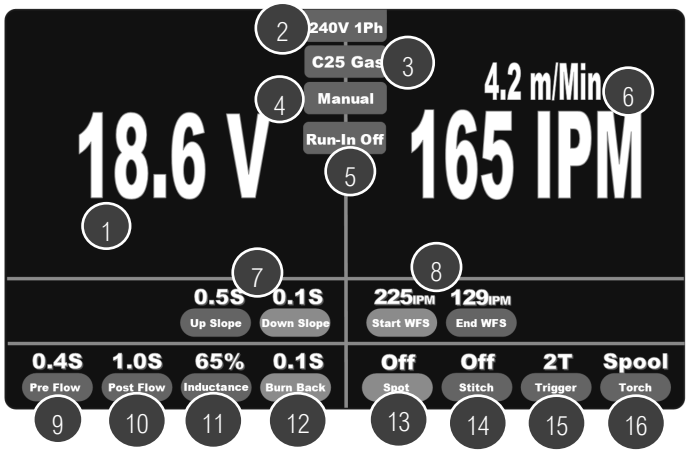

1. **Welding Voltage.** Adjust with Left adjustment knob. Select with left up and down arrow keys. When the Voltage is selected for adjustment, the numbers will brighten in color. This is the default setting of the left side. After 5 seconds of no input or adjustment of other parameters or functions, the selected setting will default back to the Voltage.

2. **Voltage Input Confirmation.** This confirms which voltage the machine is being supplied. This also serves as a diagnostic tool. If the machine does not show 240V while operating on 240V, then the power supply to the welder is likely faulty. **NOTE***:* Maximum output of the machine is governed by the input voltage. Some selections may not be possible on reduced input power.

3. **Gas/Process Reminder.** This reminds the user which gas or process has been selected. It will display either C25 (75/25 Ar/CO2 for Steel), C100 (100% CO2 for Steel), Mix Gas (98/2 Ar CO2 for Stainless/Inox), Ar Gas (100% Argon for Aluminum), or No Gas (For Flux -Cored on Steel) in wire feeding modes.

4. **Manual/PowerSet Mode**. This indicates which mode the machine is operating in, whether in full manual mode or in PowerSet mode which is a synergic, more automated mode. In PowerSet, many functions may not be available for adjustment. (See the MIG PowerSET section).

5. **Run-In On/Off.** Run-in provides a low speed start for the wire until after the arc is started. This improves the arc starting ability. This indicator reminds you whether you have it selected or not.

6. **Wire Feed Speed Indicator.** Adjust with Right adjustment knob. This indicates the wire feed speed in both Inches Per Minute (IPM) and in Meters Per Minute (m/Min). This is the default setting for the right

Setting the Unit Up for Welding/Cutting Manually

side. After 5 seconds of adjustment or no input being made, When the Wire Feed Speed is selected for adjustment the display will brighten in color. This is the setting. After 5 seconds of no input or adjustment of other parameters or functions has ceased, the selected setting will default back to the Voltage setting.

7. Up-Slope and Down Slope. These two functions are linked in function. Up Slope provides a time duration for wire speed to accelerate from the Start Wire Feed Speed (Start WFS). This can be used to further improve arc starting when used with run in and should exaggerate the hot start feel. The Down Slope provides a time duration for the wire speed to ramp down to the preset End Wire Feed Speed (End WFS). This provides time for the welder to fill the crater instead of the arc abruptly terminating and leaving a crater at the end of the weld. In 2T, the arc will start slow and accelerate up to the welding wire feed speed automatically. In 4T, the trigger should be depressed and released quickly, as soon as the arc starts, to allow the Up Slope to function and accelerate the wire speed. If the trigger is held the Up -Slope will be delayed until the trigger is released. Note that Down Slope will keep the wire feeding briefly after the trigger is let go in 2T if a time value is set more than 0.0 seconds. In 4T the trigger is depressed and held to control the actual arc termination, or is depressed and let go quickly to automatically allow the wire to decelerate to the End WFS. If one or both of these functions are not desired, select 0.0S. In PowerSet mode these functions are managed automatically and will be non-adjustable. If manually rapid tacking or spot welding select 0.0S for both.

8. Start and End Wire Feed Speed (WFS). The Start and End Wire Feed functions (Start WFS, End WFS) allow the user to set a predetermined wire feed settings at the start and end of the weld. At the Start of the weld, if being used, a lower setting creates a smoother start with less popping and spattering typical of cold starts. The reduction of the sputtering (also known as "machine gunning") will be noticeable at lower settings than used to weld. End wire feed speed is designed to be used to fill the crater at a lower Amperage/WFS to help prevent stress in the weld. If in doubt about the best setting for either, always start at the minimum Start and End WFS setting for the smoothest starts. Or, for general purpose welding set both to 60% to 75% of welding wire feed speed and fine tune it as desired.

9. Pre-Flow. The unit has an adjustable pre-gas flow setting. This automatically times the flow of gas before the weld, improving overall weld quality at the critical start of the weld. However, the user may opt to turn down this setting if desired Use the left Up and Down navigation keys to navigate and highlight (turn green) this setting. Use the left adjustment knob to turn the setting on or off. In Flux-Cored mode, this feature will be unavailable and be listed as N/A.

10. Post Flow. The unit has an adjustable post-gas flow setting. This is complimentary to the Preflow setting and also serves to improve the weld quality and prevent oxidation after the weld is terminated and also serves to provide gun cooling. However, the user may opt to turn down this setting if desired Use the left Up and Down navigation keys to navigate and highlight (turn green) this setting. Use the left adjustment knob to turn the setting on or off. In Flux-Cored mode, this feature will be unavailable and be listed as N/A.

11. Inductance. This improves the wet in of the weld. A low setting will result in a very poor arc, with a high pitch. The result will be a raised ridge in the middle and poor wet-in. Excess spatter may be observed. The result of too high of a setting will result in a very fluid, flat puddle. The pitch will be raspy and not smooth. Starts will not be as smooth Generally a setting of 65 to 75% is a good starting point on Steel with C25. With Steel and C100, 70 to 80% is a good starting point. Generally pure CO2 is not very smooth on many welders, but with inductance control, high quality welds can be achieved. Stainless requires the highest inductance with 90% or greater. Aluminum can range depending upon the wire from 60 to 80% or so. Flux-Core behaves a little differently with a 40 to 50% starting point. Of course, different weld positions, joint designs and thicknesses of metal can affect the inductance requirement slightly. Use the left Up and Down arrow keys to navigate and highlight (turn green) the Burn Back control. Use the left side control knob to change the value.

12. Burn Back. This is the amount of time the arc stays on after the wire stops feeding. It is used to help prevent the wire from sticking in the weld and to reduce the need for constant trimming of the wire before restarting. Use a setting of .1 to .3 seconds to begin with for most applications. Smaller diameter wires need less burn back time. Use the left Up and Down navigation keys to select and highlight (turn green) the Burn Back feature. Use the left adjustment knob to adjust the duration of the Burn Back.

13. Spot Timer. This is a timer that can be set to automatically shut off the weld when the trigger is held down. This allows you to make repeatable and perfectly sized tack welds or short seams. Use the Right side Up and Down navigation keys to navigate and highlight (turn green) the Spot Timer. Use the right side adjustment knob to turn the Spot Timer on and set the duration of the spot timer.
NOTE: Keep in mind that If the spot timer is turned on accidently, the wire feed will stop suddenly soon after the trigger is pressed. In fact it may barely feed and just seem to quit if the time is set low. This is normal, but often a source of tech support calls. If your wire feeder stops feeding unexpectedly after the trigger is pressed, check this function first.

14. Stitch Timer. This function works only in conjunction with the Spot timer. This provides a continuous "on/off" action of the spot timer, allowing the user to move smoothly and evenly space spot welds along a seam or around a part, providing "stitches", or a series of tack welds. The time set is the length of "OFF" time between the Spot cycles. The trigger will be held down and the spot/stitch cycle will continue until the trigger is released unless the unit is being used in

Component Identification and Explanation

Setting the Unit Up for Welding/Cutting Manually

4T mode in which case the trigger will be pressed and released and the cycle will begin. A second press of the trigger will be required to terminate the cycle. (See next item for 2T/4T explanation.)

15. Torch Trigger Function. This controls how the welder reacts to the torch trigger. In 2T, the trigger is pressed and held to weld. In 4T, the trigger is pressed briefly to start the arc, then released to continue to weld. The weld is continued without the torch trigger being held down. The trigger is once again pressed, held and then released to terminate the arc.

16. Torch Type. Select between the main MIG gun or Spool Gun function.

The Manual Stick Screen

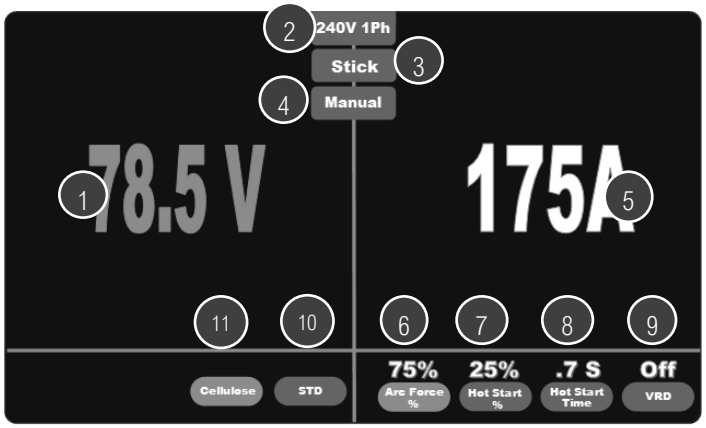

1. Welding Voltage. In Stick Mode, the Voltage is not adjustable due to the nature of stick (Constant Current) welding. The voltage varies according to the length of the arc. The Voltage displayed while idling is the Open Circuit Voltage (OCV) of the machine. While welding this changes to reflect the actual arc voltage.

2. Voltage Input Confirmation. This confirms which voltage the machine is being supplied. This also serves as a diagnostic tool. If the does not display 240V, then the power supply to the welder is likely faulty. NOTE: Maximum output and accuracy of the machine is affected by voltage lower than 220V.

3. Process Reminder. The process reminder displays "Stick" when stick mode has been selected.

4. Manual/PowerSet Mode. This indicates which mode the machine is operating in, whether in full manual mode or in PowerSet mode which is a synergic, more automated mode. In PowerSet, many functions may not be available for adjustment. (See the Stick PowerSET section).

5. Amperage. The Amperage is adjusted by the right side adjustment. This is the default setting. If no adjustment is made to selected functions or parameters, the machine will automatically default back to the Amperage setting after 4 to 5 seconds.

6. Arc Force %. The arc force function only works in Stick mode. Arc force is used to offset the loss of overall wattage (VxA=W) as arc length is shortened and voltage begins to drop while stick welding. It offsets the drop in voltage by injecting extra amps into the weld when voltage drops below 20V. This enables the amperage to react aggressively or mildly, depending upon settings, to prevent arc outages, and allowing the user to hold a tight arc and maintain better control.

7. Hot Start %. This adjusts the intensity of the start. When welding this helps to prevent electrode sticking and helps to eliminate porosity at the start of the weld. . Hot start intensity is the percentage over the set amps at which the Amps will be boosted during the arc start.

8. Hot Start Time (S). This sets the amount of time the hot start stays engage at the beginning of the weld.

9. VRD. This is called the Voltage Reduction Device. It is a safety feature designed to help reduce chance of shock or electrocution. This lowers the OCV of the machine helping to reduce the chance of accidental shock or electrocution while welding where the user may become a part of the circuit path of the weld. This may be required in some situations by regulations. This will increase arc starting difficulty on some rods. If this is not required, or the conditions exist where the user is perfectly insulated from the work and the possibility of becoming a part of the circuit path is low or eliminated, it may help to turn this setting to "OFF". To help start the arc while the VRD is on, a quick double tap will help to strike the arc instead of the single scratch or tap.

10. Standard Mode. This mode is to be used with all stick electrodes except electrodes with a cellulose-based flux, i.e. 6010, 7010, 6011 etc. It provides a softer arc, with low spatter and a smooth bead appearance.

11. Cellulose Mode. This mode is to be used with welding electrodes including 6010, 7010, 8010, 6011. It provides a more forceful, penetrating arc. When combined with hot start and arc force, this setting will make the arc more aggressive and help with maintaining a key hole in root pass welds. As a general rule, keep the arc short as possible to prevent arc outages and increase the arc force to 65% or more to maintain the arc and digging characteristics of the rod.

The Manual Plasma Cutting Screen

Remember the Plasma cutter uses compressed air. The air pressure, though it is reflected on the front of the unit, is adjusted on the rear at the regulator. The air pressure will not be adjustable through the front control knobs. Air pressure is subject to change while cutting due to changes in supply air pressure. Always set the air pressure while the gas is flowing. It is normal to drop 3 or 4 PSI while cutting. Recommended pressures are always cutting pressures, and not static pressures. If the air pressure drops by more than 5 psi when cutting from the static pressure reading,

Setting the Unit Up for Welding/Cutting Manually

increase supply hose diameter. Do not supply more than 90 psi to the rear regulator from the air compressor. If needed, the plasma cutter may be operated with Nitrogen gas with a high flow regulator.

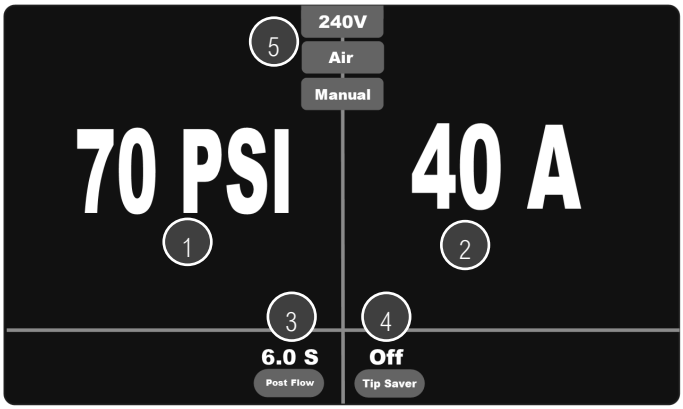

1. Air Pressure. The air pressure is set and adjusted on the rear of the unit by the air pressure regulator that you previously installed. The display reflects the air pressure that you have set, or the air pressure that is present in the system while cutting. The left adjustment knob cannot be used to adjust the air pressure. This side of the display only reflects air pressure and is not controlled by any front panel control or button. However, it still serves as the default area for navigation purposes. If air pressure drops below acceptable safe levels for the torch operation, an error code screen will be displayed and the plasma setup screen will not reappear until the air pressure is at the suitable pressure required for operation. This may also happen if air pressure is too high. Upon startup, if the Cut function is selected, and no air is connected, the error screen will appear automatically.
2. Amps. Set amps with the right side control knob. Be sure to change consumable size with the change in Amps. Use the plasma torch parts and breakdown page in this manual, or use the PowerSet function to determine the correct consumable size to use.
3. Post Flow. This sets the amount of time the air will continue to flow after the arc has stopped. This is used to cool the torch and extend consumable life. Set this for at least 3 to 5 seconds unless making very short cuts. Typically 1 to 2 seconds for every 10A is sufficient.
4. Tip Saver. By setting this function to "ON" the unit will only initiate the pilot arc one time, at the beginning of the cut. Once the pilot arc has shut off once the arc is established, the arc will go out if continuity is lost. The Pilot arc will not relight unless the trigger is pulled again and held to reset. If the Tip Saver is "OFF", then the pilot arc will automatically relight when continuity is lost if the trigger is kept held down. Keep the Tip Saver "OFF" if cutting, painted, rusty or expanded metal where continuity could be lost. NOTE: The pilot arc will eventually time out in either mode. Keep pilot arc on time to a minimum. Do not pull the trigger to light the pilot arc unless you are ready to cut. Using the pilot arc greatly affects consumable life.

Component Identification and Explanation

Setting the Unit Up for Welding/Cutting Manually

The Manual AC/DC TIG Screen

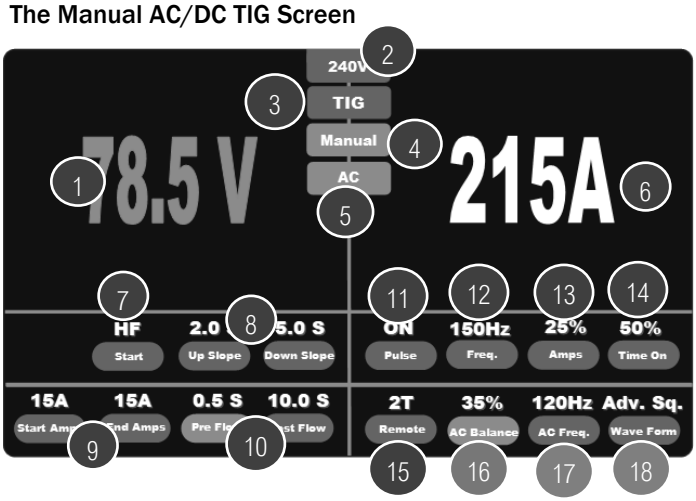

1. **Welding Voltage.** TIG welding voltage will always be displayed in green. The welding voltage for TIG is not adjustable since the voltage is controlled by the arc length. The default voltage displayed when no welding activity is occurring is the Open Circuit Voltage (OCV). When welding, the OCV will drop to reflect the actual welding voltage.

2. **Input Voltage Confirmation.** This confirms which voltage the machine is being supplied. This also serves as a diagnostic tool. If the machine does not show 240V while operating on 240V, then the power supply to the welder is likely faulty. **NOTE***:* Maximum output of the machine is governed by the input voltage. Some selections may not be possible on reduced input power.

3. **TIG Process Reminder.** This reminds the user which process is in use. In <u>any</u> TIG process, the shielding gas used is 100% Argon. There is no gas reminder since Argon is always assumed for TIG.

4. **Manual/PowerSet Mode**. This indicates which mode the machine is operating in, whether in full manual mode or in PowerSet mode which is a synergic, more automated mode. In PowerSet, many functions may not be available for adjustment. (See the MIG PowerSET section).

5. **AC/DC Mode Indicator.** The unit displays the TIG mode. DC TIG is *generally* used for all metals except Aluminum and Magnesium and related alloys. AC is *generally* used for both Aluminum and Magnesium alloys.

6. **Amperage.** The Amperage is adjusted by the right side adjustment. This is the default setting. If no adjustment is made to selected functions or parameters, the machine will automatically default back to the Amperage setting after 4 to 5 seconds.

7. **Start Type.** The unit features different start types for TIG, which include both Lift TIG and High Frequency (HF) start types. HF is a touchless start. Lift TIG requires the torch tip to touch the metal briefly before the torch is lifted up to create an arc. Usually, all metals are welded with DC unless it is an Aluminum or Magnesium, or an alloy thereof. Stainless, Bronze,

8. **Up and Down Slope.** Up and Down Slope provide a ramping up or down of the welding Amperage from the Starting or Ending Amp Setting. This is not used with the standard Pedal setting. But with settings such as 2T or 4T the unit can be programmed to slowly or rapidly (depending upon the length of time selected) to increase or decrease the Amperage to the preset Welding Amperage. *In some cases where the Start Amperage is set above the welding amperage for a "Hot Start" effect, the Up Slope will actually slope "down" to the welding Amperage. Technically, the Down Slope could slope "up" if the End Amperage value was set above the Welding Amperage, though this would rarely be the case.*

9. **Start and End Amps.** The Start and End Amps determine the Amperage at which the weld begins and ends. Starting Amperage helps to establish the arc and can be used to create a gentle or harsh start depending on the weld conditions. Typically the Start Amps will be set lower for an easy start and transition to welding Amperage. However, for use with the torch switch, occasionally a Hot start higher than the set welding Amperage may be required to establish a puddle. A low Amp start is desirable so that the Tungsten life is improved and less contamination occurs when the arc is struck, and it also prevents burn through on thin metals. However, the Tungsten size will dictate the minimum stable start the unit can perform. For best results with 3/32 and 1/8" Tungsten, set the Start Amps to 15 to 20A higher than the minimum setting allowed. End Amp settings will be similar to Start Amps, especially when using the foot pedal to provide a gentle taper off of the arc so the weld crater can be properly filled

10. **Pre and Post Flow.** The Pre and Post Flow settings provide a timed flow of gas before the weld starts (Pre) and after the weld ends (Post). Shielding gas flow before the weld is important to providing a pocket of gas to displace the atmosphere and to provide an easily ionizable gas between the tip of the Tungsten and the work piece to help establish the welding arc. Post Flow provides after weld cooling and protection of both the weld and the Tungsten. In general, .5 seconds of Pre Flow time is enough gas flow to establish the arc properly. Post Flow is generally determined by the amount of Amperage used and the amount of time the weld takes to make. At a minimum, consider using 3 seconds for any weld. But figure as a general rule, dividing your amperage by 8 or 10 to determine the number of seconds of Post Flow time required. For short welds use 8. For long or heavy welding, use 10.

11. **Pulse.** The Pulse is used in both AC and DC modes with this machine. Pulse helps to average "down" the Amperage, while maintaining penetration and travel speed. This helps to heat wicking and the subsequent warping often experienced on thinner metals. The pulse is composed of two parts. The first part of the Pulse is the Welding

Setting the Unit Up for Welding/Cutting Manually

Amp stage of the pulse. This is the highest Amperage stage of the pulse. This is also referred to as the "Peak" Amperage. The second part of the Pulse cycle is the Pulse Amperage stage. This is also referred to as the "Base" Amperage, or sometimes technically referred to as the "Background Current". At low frequencies, below 10Hz, and usually between .5Hz and 2 Hz, the pulse is also used to improve weld appearance by created a stacked, or neatly rippled puddle. At higher frequencies, it can be used to decrease arc cone width and focus the arc. Generally, pulse is not used for welding thicker metals unless warping is a concern.

12. Pulse Frequency (Hz). Pulse Frequency is the number of times per second that the pulse cycle occurs. Low pulse frequencies commonly used around .5 to 2 Hz allow the user to create a rippled, or defined puddle and allows time to add filler before the next cycle occurs and freezes the puddle. High pulse frequencies are useful for constricting the welding arc cone and improving arc directability and control of the welding heat.

13. Pulse Amps. Pulse Amperage is sometimes referred to as "base" amperage and is the low amperage stage of the pulse. This is the "freezing" stage of the pulse where the weld puddle begins to cool at low frequencies. At higher frequencies, the Pulse Amps help bring down the overall average Amperage input. This helps to control heat input. Pulse Amps should not be confused with "Peak" welding Amps, which are actually set with the main welding Amp setting.

14. Pulse Time On. Pulse Time On is a time adjustment (expressed in % that allows you to set and change the amount of time the pulse spends in the "Peak" welding Amp stage of the Pulse and the "Base" Pulse Amp stage of the pulse. Sometimes this is referred to as the Pulse "Duty Cycle". As a percent of welding Amps, the amount of time can be split 50/50, 60/40 or any amount you desire up to the setting range limit of the machine. In this case, the Pulse Time On refers specifically to the percent of time that Welding Amp stage is "on" during one pulse cycle. General purpose welding will usually use a configuration such as 60% Pulse Time On, or at least 50%. If the pulse frequency is high or low, a 60% setting means the total amount of time in one second is spent in the Peak welding Amp stage. But these are just beginning points and the user can experiment with finding the best balance to meet the requirements. The higher the Pulse Time on is, the faster the travel speed will be and the greater the wet in of the puddle will be. But average heat will be increased as well.

15. Remote. This function provides a choice of control over how the welding arc is started/ended and how the Amperage is controlled. The 2T and 4T selections use the torch switch to start and end the arc and allows the programming on the machine to cycle the programming and control the slope functions as well as specific arc termination times. 2T is simply a "press and hold" function. The arc will cycle on and will ramp automatically to the Welding Amp Selection set on the machine. Releasing the trigger will down slope and terminate the arc. 4T gives more control over the weld cycle. To use, press down and hold to start the Preflow and the arc. Once the Preflow time is over and the arc is established, release the torch trigger to weld. When the weld is done and the arc is ready to be terminated, press and hold the trigger until the machine fully down slopes and the down slope cycle has reached the end. When this happens, release the trigger and the arc will terminate and the timed post flow period will begin.

16. AC Balance % (For AC applications only. Not used for DC). The AC balance controls the balance between Electrode Positive and Electrode Negative during the AC cycle. This is expressed as a percent of 100% Electrode Positive (+). The Electrode positive portion of the AC wave form provides cleaning. The Electrode Negative portion of the AC wave form provides weld penetration. If too much cleaning percent is used, the Tungsten may ball, or the cleaned/etched area running parallel to the weld will be excessive. Typically set the cleaning for 30% EP+ for sufficient cleaning to occur. Less EP+ may be used to lessen the width of the cleaning lines that parallel the weld. Using a setting of more than 40 to 45%, the Tungsten will begin to ball and the arc may begin to wander. At 50% EP+ the tungsten will begin to be consumed rapidly. If 50% EP+ is required to provide adequate cleaning on dirty or impure aluminum, step up the size of the Tungsten to be able to hold the heat without over-melting. If AC balance is set to 30% and the cleaning area is too wide, that is a good indication of too slow of travel speeds. In this case, set the unit for more Amperage, and increase travel speed.

17. AC Frequency (Hz) (For AC applications only. Not used for DC). AC frequency helps to control the arc focus when welding in AC mode. Frequency refers to the number times per second the AC cycle occurs. Increasing the frequency narrows the arc cone and creates a more pinpoint and directable arc. However, when a higher frequencies are used, the puddle does not wet in as quickly. For a good starting point, start with a frequency between 90 to 120Hz. This range offers a good, consistent result while providing good arc control and an acceptable arc cone for most situations in daily welding. Note that at high frequencies, the pitch of the arc will be higher and louder.

18. Wave Form Control (For AC applications only. Not used for DC). This unit features multiple wave forms to provide better welding control. The wave forms featured in this unit are Advanced Square, Soft Square and Triangular. Advanced Square is typically used for most default applications. It provides an excellent puddle wet-in and best travel speed. Soft Square provides a more rounded feel, with a softer arc and works well with people used to transformer style square wave. The Triangular Wave form is normally used for welding thin materials. The design of the wave form provides the least amount of heat input and will often feel "cold" if used for thicker materials.

Component Identification and Explanation

Setting the Unit Up in The PowerSet Mode

UNDERSTANDING POWERSET.

The PowerSet mode, regardless of process selected is designed to help the user make accurate settings without the aid of complicated charts or calculators. This helps both new welders and professionals to set the machine easily without an extensive trial and error process.

The synergic nature of PowerSet mode requires the user to input certain basic information (depending upon the process) such as metal thickness, electrode diameter, wire type, and gas type. Once entered, the machine takes over from there and presets a setting that is determined mathematically from the information given.

While PowerSet is a useful tool, not ever possible scenario can be predicted. It does a good job at getting close to the right setting (in most case, it will be very accurate). But things like weld position, joint design, and even certain welding styles can create a situation where the provided setting is not perfect. In these cases, the PowerSet allows the user to fine tune the settings. However, there is a limit to adjustment that is allowed in the PowerSet mode to prevent an unworkable setting. This is usually a sufficient amount of adjustment allowed to allow the user to find the perfect adjustment. *However, in the event the user cannot find the perfect setting in PowerSet mode or is unhappy with limitations placed on other functions or modes, the user should leave PowerSet mode and use it in the manual configuration.*

USING POWERSET MODE.

Starting PowerSet Mode

To use the PowerSet mode, first select the process you wish to use, paying attention to the type of gas/metal you are welding. Then, once you have properly set the process, select the Power Set Button at the bottom right side of the panel by pressing the button briefly. The LED above the PowerSet button will illuminate. This will activate the PowerSet Screen for the process you are using. (Each process allows the use of PowerSet.) Once activated you will be ready to begin entering the information. Be sure the information is accurate to achieve the best recommended setting.

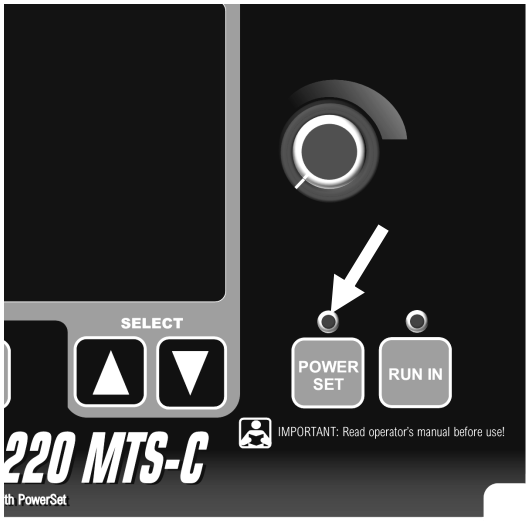

Using PowerSet Mode.

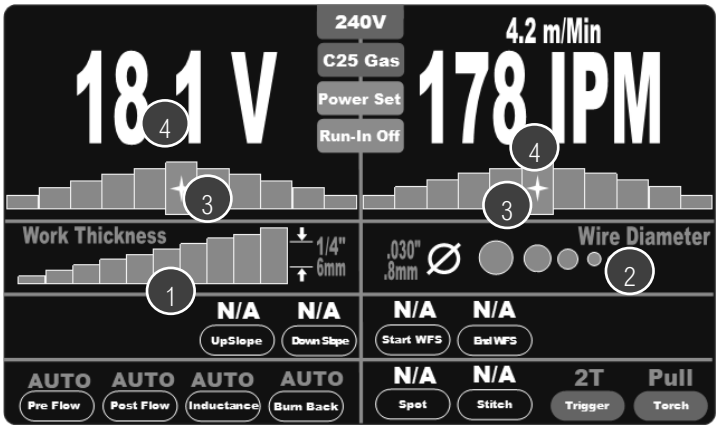

Keep in mind that if you don't enter the correct information into the machine, the machine will operate correctly. The machine is dependent upon correct inputs for accuracy. Always review the information you've put into the machine before deciding the unit isn't working correctly or there isn't enough adjustment to provide the proper setting. This machine cannot sense wire diameter or plate thickness.

Regardless of the Process, the PowerSet mode essentially functions the same. The above image is the PowerSet mode as it appears in the MIG C25 process. Each process is slightly different with which functions and parameters are allowed to be set, but otherwise setup procedure is nearly identical. Begin the setup process by using the up and down arrows (▲▼) on the *left side* to navigate to the "Work Thickness" **(1)** level. Rotate the *left side* adjustment knob to select the thickness of the metal you are welding, or the closest thickness/gauge if not listed. Continue the setup process by using the up and down arrows (▲▼) on the *right side to navigate to the* "Wire Diameter" **(2)** (Each mode varies whether its electrode size or wire diameter that is to be selected). Use the *right side* adjustment knob to select the correct size. **NOTICE: If operating on 120V, some sizes and diameters will be not be allowed to be selected as it is considered beyond the capacity of the machine. In some cases, selections may be limited because it is beyond the capacity of the electrode size or wire diameter to properly weld or cut.**

Once the information has been entered, the machine will automatically set your welding or cutting parameters for you and will be indicated by the center adjustment bar in the stair stepped indicator below the parameter (3). The bar will have a 4 pointed star to indicate this is the target setting and will be highlighted green. If you need to fine tune the setting, the location of the green bar will move left or right down the "stairs" to the next lower level, (depending upon whether you are increasing or decreasing the value). If you move further than is recommended, the bar and numbered value (4) will turn red. If you find that you have moved too far off the suggest setting of the machine, all you will need to do is turn the adjustment knob until you are back at the center, tallest bar. Once you are

Setting the Unit Up PowerSet Mode

back at the suggested setting, the white 4 pointed star will reappear. Keep in mind these are suggested setting only. *The unit is designed so the user can adjust the functions up or down freely until the limit is reached to achieve desirable results. If a setting is too hot or too cold, adjust the settings to the desired result is achieved*. Even though the settings may be in the "red" this will not harm the welder. It is simply suggesting the setting is out of the range that is typically recommended by the industry for general purpose welding. If the PowerSet setting does not allow enough adjustment, switch to Manual mode and create your own settings and save them under a program number for easy recall.

If you need to make any changes to the functions, use the up and down navigation arrows to navigate to the bottom of the menu and to the function. Most parameters will be on a black background and display either "AUTO" or "N/A" above them. These will be blocked from access and will be automatically set for you. If you desire control of these settings, then deselect the PowerSet mode and use the manual mode. **HINT:** If you are concerned about loosing the PowerSet mode to access and control things such as Pre/Post Flow or Inductance, simply copy from the PowerSet mode and then use the suggested settings into manual mode. You are then free to make any adjustment you need to any parameter or function permitted.

In Stick PowerSet mode, you will notice different restrictions on rod size selections that are allowed with different rod types, especially in 120V mode. This is normal. The welder's programming takes into the account the normal min/max range of each class and size of welding rod and it's respective capability at any given amperage.

Similarly in TIG PowerSet mode, some functions will be restricted or placed in Auto mode and will be preset or controlled based off the user inputs. In PowerSet, Pre and Post Flow functions are selectable for adjustment. The user may also select the type of arc start and the remote type used. Everything else will be preset for the user.

In Plasma PowerSet mode, the settings are very basic. **However, remember to change your cutting tip based off the amperage suggested. Using too large or too small of a tip will cause malfunction of the cutting arc. If the tip is too small, the consumable will wear very quickly. If the consumable is too big, the arc will be unstable. The amp range for each size cutting tip is found on the Plasma torch parts page in this manual. This unit comes equipped with 40A tips.** Most all items can be cut at 40A, regardless of the PowerSet suggested settings. The biggest difference between using a 20A rated tip and a 40A rated tip is the kerf width and the cut speed needed to keep the cut blown out and clean. On thin metals, the 40A tip may cause weld back after the sheet metal has been cut, or some extra dross may appear.

Component Identification and Explanation

NOTICE:

The following sections cover MIG, TIG, Stick, and Plasma terms, definitions, and basic operation. Some of the terms overlap from process to process and serve essentially the same functions. Take note that some terms will repeat from process to process, but will be described in a way that is specific to the process being used. In some cases where function is identical or so similar to the same function found relating to another process it may not be repeated or redefined. For example, the 2T/4T torch switch function applies to both MIG and TIG, and it behaves similarly for each. However, there are slight differences to what it controls The general description under MIG and TIG will describe it slightly differently to accommodate the operational differences, but in the main drawing and discussion, the function will be more generic to accommodate both processes.

Component Identification and Explanation

Using The Trigger/Torch Switch Remote Functions

Operating the 2T/4T Remote Function

The Remote Torch Trigger function works with both the MIG and TIG processes. The Trigger function is designed to allow the user to program the welder so that the stages of the weld cycle can be controlled via operation of the torch switch. This should not be confused with a Remote Amp control like a Foot Pedal or a Spool Gun Amp control wheel. The switch itself provides no adjustable control. It is only designed to cycle a stage or stages of the weld cycle. Both TIG and MIG processes behave similarly in 2T and 4T modes since there are very similar controls in both processes.

2T function controls all of the weld cycle with a simple press-and-hold and release action. This is the conventional "pull the trigger" mode that is familiar to most users, but it involves controlling more functions than a simple "on and off" of the weld arc. This is also called a 2 step function. The torch trigger moves in two directions, each change of direction signals the welder to advance to another part of the weld cycle

4T function controls each stage of the weld cycle by multiple press and hold actions of the torch trigger. This is used to retain manual control over the slope stages and start and end portions of the weld cycle through each movement of the torch trigger. Press the trigger and hold to start the Pre-flow cycle and start the weld. Once the arc has started release the trigger to upslope and weld at the normal set Amperages. Pull and hold the trigger to allow the down slope cycle to occur. Once the down slope cycle has completed and the weld crater is adequately filled, release the trigger to end the weld. The arc will terminate and the Post Flow cycle will begin. A common error is to simply click the torch trigger rather than hold the trigger during the down slope. The only time the trigger should be clicked is in the middle of the down slope cycle to toggle the weld back to the welding cycle Amperage. If the cycle has fully reached the bottom of the down slope the cycle cannot be restarted and the arc will terminate when the trigger is released. This is useful for managing the weld heat once it begins to get hot. This toggling feature can be repeated during the weld. It's not meant to be a adjustable amp substitute, but it is useful to help manage heat temporarily when a weld gets too hot to manage.

When using the TIG foot pedal, the Up and Down Slope functions are irrelevant because the user's foot is controlling that function manually. It's important to select only the "Pedal" function for the unit when the foot pedal is plugged in.

For the Spool Gun in MIG mode, the selection of the torch type automatically gives you control over the Amperage, but it still cycles all of the 2T/4T programming through the separate trigger pulls. The Wire Speed/ Welding Amps are adjusted on the gun, while the max amperage is set on the screen.

See the next column for a visual explanation of 2T and 4T function in TIG and MIG. Notice that the arrow buttons indicate an up (in or press) or down (out or release) movement of the torch trigger.

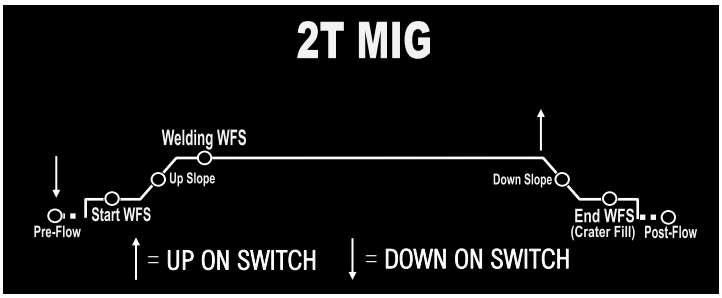

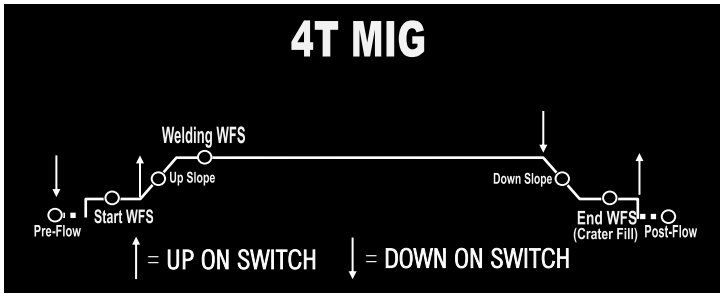

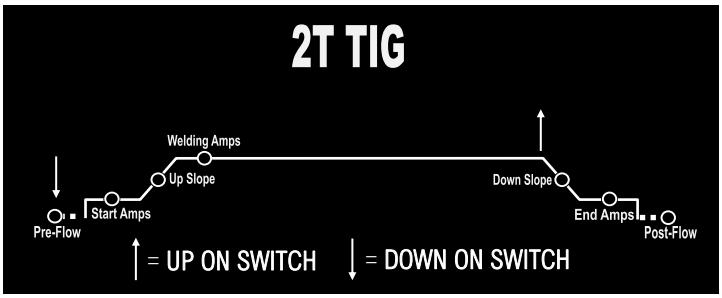

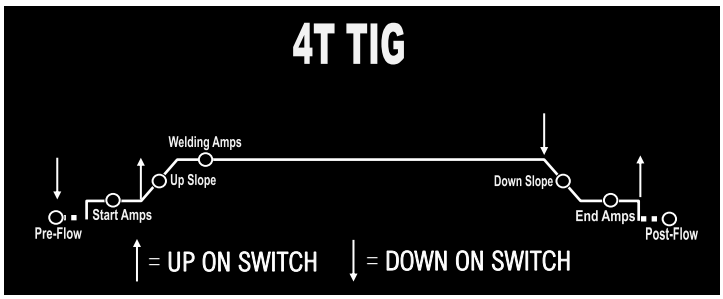

Component Identification and Explanation

Explanation of MIG Functions and Terms

EXPLANATION OF WELDER FUNCTIONS

Volt and Amp Settings

When welding, the two main functions that require adjustment are Voltage and Wire feed speed. The function of voltage in MIG welding is to control the overall width and to a great extent, the height of the weld bead. In other words, voltage controls the bead profile. It controls wet-in at the toes of the weld, and arc length. Short arc lengths provide wider welds. The wire feed speed directly controls the amps, and in turn amps control penetration. When setting the welder up you will notice that the wire speed is displayed in Inches Per Minute. The relationship between wire diameter, wire speed and amps is easily figured with the following approximate industry conversions:

.023": 3.5 x Amps = Inches per minute (IPM)

.025": 3.1 x Amps = Inches per minute (IPM)

.030": 2 x Amps = Inches per minute (IPM)

.035": 1.6 x Amps = Inches per minute (IPM)

.045": 1 x Amps = Inches per Minute (IPM)

To convert wire speed (IPM) into approximate Amps, use the following conversion formula:

.023": IPM ÷ 3.5 = Amps

.025": IPM ÷ 3.1 = Amps

.030": IPM ÷ 2 = Amps

.035": IPM ÷ 1.6 = Amps

.045": IPM ÷ 1 = Amps

Keep in mind these are approximate conversions and do fall off in accuracy as amps are increased into the upper current limits for the given wire diameter.

Even though you will find general recommendations about setting the Amps, Volts and even shielding gas through a variety of free downloadable apps and online calculators, every filler metal manufacturer has its own specific parameters for Volt and Amp settings for each wire diameter and class of wire. The ranges of volt and amp parameters generally varies somewhat from brand to brand, so be sure to read the packaging and/or manufacturer literature to determine what range of settings are recommended. The wire diameter also limits the practical maximum thickness of what can be reasonably welded. The issue with following charts, graphs and calculator recommendations is that most people find them either too hot or too cold. For some people, it may not be close to the setting they are used to. However, nothing can substitute for watching and listening to the arc. If the arc is correct, a steady sound, similar to the sound of bacon should be heard. The actual frying sound can vary somewhat and may have somewhat of a higher pitch whine to it. If these sounds are present, look at the arc to see if it is steady, and producing low amounts of spatter. If large amounts of spatter are present, the puddle seems fluid (appears wet) and the wire speed is within the targeted range, decrease volts a little at a time to reduce the spatter. If this does not correct the problem, change the torch angle and torch height. Hold the torch more vertical, with less than a 15 degree deviation from vertical and reduce stick -out of wire to 3/8" or less. If this still does not help, reduce the wire speed. Some spatter is normal, though it should be minimal overall.

The wire can also pop and spatter if the voltage is too low for the wire speed and/or wire diameter. This is mostly observed as flying bits of red-hot but un-melted wire, along with popping as the wire inconsistently stubs into the puddle. This is followed by the wire pushing back against your hand pressure while the wire visibly turns white/red hot before burning off. Too low of voltage will also produce a high piled bead with the toes (edges) of the weld not properly wetting in resulting in poor fusion.

Even though the PowerSet feature has been provided, sometimes additional adjustment may need to be made based off of welding position or joint type. With this unit, we've tried to provide plenty of adjustment range in the PowerSet function. Normally, this will still allow a functional setting. However, when the welding wire is pushed to its maximum limits with Volts and Wire Speed limit, welding may not be smooth and spatter, undercut, and burn back (when the wire melts back to the tip) may occur.

Starting the Arc and Welding In the MIG Process.

Starting the arc is a relatively simple process. Before beginning, the wire should initially be trimmed to between 1/4 to 3/8". Once the wire is trimmed, the gun should be firmly grasped to prevent a phenomenon often referred to as "machine gunning". A light grasp, especially at start, can cause the arc to stutter as the wire pushes back on the gun, lengthening the wire stick-out and creating an irregular start and a porous weld.

The end of the wire should be positioned just barely above the metal when the trigger is pulled for the cleanest start. This will position the end of the contact tip about 1/2" above the weld. The gun should be in the vertical position, with no more than 5 degrees lean in either side to side direction.

Holding the wire too far off from the metal will result in rough starting and too long of wire stick out.

Once the arc has been established, the gun can then either be pushed or pulled in the direction of the weld. In either case, the gun nozzle should be positioned directly over the weld without angling the wire to one side or the other of the weld as already mentioned. The gun should have no more than 15 degrees lean pointed into (push) or pointed away from (pull) the direction of travel. In most cases a push motion is desired. However, a lot of texts offer conflicting information on whether to push or to pull the gun. In reality, both are correct if used correctly and with each having particular strength and weakness. Either one done with too much gun angle will result in undesirable results. Most open-minded people who are

Component Identification and Explanation

Explanation of MIG Functions and Terms

well versed in MIG quickly develop a sense of when to push and when to pull the gun. Even for novices, a sense of when to push and pull the gun comes quickly with a little practice. Pushing can result in shallower penetration but the molten puddle is easier to see and the arc sits easily on the leading edge. It will usually leave a aesthetically pleasing bead. However, be careful to prevent the gun from leaning toward or away from the direction of travel too much as spatter will increase and shielding gas flow may become turbulent, creating porosity in the weld. Pulling will result in deeper penetration, but can result in a narrow bead without much side fusion. It also can leave an undesirable humped appearance if not done correctly or if travel is too slow. **Whenever MIG welding with Aluminum, whether with the standard MIG gun or the Spool gun ALWAYS push the gun. If using Flux Cored wire, a dragging motion is almost always recommended.**

Weaving in Welding. Weaving (oscillating the torch or electrode from side to side in one pattern or the other), particularly in MIG, is a topic of controversy as much as whether to push or pull the MIG gun. Stringer beads are often best for novice welders. Stringers are simply straight beads that move forward with little or no side to side travel or oscillation. These will offer the soundest welds for a beginner in MIG or Stick. Stringer welds leave little or no room for contaminates to enter the weld and are the fastest to produce without creating an opportunity for cold lap. Moving too quickly however with a stringer can create undercut which will weaken the weld. The best policy is to move a slow steady speed, making sure the sides of the weld are filled. If undercut is present, it is either from too much voltage or moving before the wire has time to fill the area the arc has melted.

Think of weaving as a method of "sewing" the metal together. If weaving is of interest to you, start with the basic weave pattern. Simple weaves using one variation or the other of a cursive "e" motion are best to begin with. Other weave patterns can be used of course. C's, V'S, U's , Triangles and many more weave patterns can be used depending upon the application. Weaves are employed for a number of reasons. Weaves are often considered to have a more pleasing appearance and can help bridge gaps where fit up is a problem. A weave is also frequently used to manage heat build up. For example: when welding vertically weaves are almost always used to prevent the molten metal from sagging due to the force of gravity. The major drawback of weaving is that it introduces a greater possibility of getting inclusions and other forms of contamination in the weld. Properly done weaving is a valuable tool, but it must be practiced before employing it in any structural or critical application.

Metal Cleaning.

MIG and TIG welding requires a well prepped surface to obtain a sound weld. The removal of paint, rust mill scale, or other contaminate such as grease should be done before welding. Stick welding is more forgiving of rust and mill scale, but when MIG welding, contaminates will result in porosity and inclusions in the weld, weakening it. In TIG welding it can be disastrous. TIG requires the most cleaning effort. A grinder will usually prep the metal sufficiently to remove oxidation and paint. However, to remove grease a degreaser such as acetone should be used. Do not use any degreaser such a brake cleaner with chlorinated solvents or death or serious injury may occur!

MIG and TIG filler wires such as ER70S-6 or ER70S-2 include a sufficient level of deoxidizers such as silicone and copper that are formulated to allow it to handle minor to moderate amounts of rust and mill scale. These deoxidizers will float out most moderate amounts of contaminates out of the weld and will appear in the usual form of glassy like deposits on top of the cooled metal. They are easily brushed off before starting the next pass. They should not be welded over. Any pinholes that appear are a result of trapped gas in the weld and should be ground out before the next pass. It should be noted that some MIG wires such as ER70S-3 have low levels of deoxidizers and must be thoroughly cleaned and ground before welding. MIG and TIG ER70S-2 and ER70S6 are the same except that TIG wire is cut to lengths and MIG wire is continuous. When welding fine gauge materials in TIG, you can substitute sections of thinner MIG wire.

Multiple Pass Welds.

One of the common misunderstandings that people have when beginning to weld is that if the welder has the power, then a single heavy pass should be used to weld it up. This is wrong. This technique is a good way to induce cold-lap and inclusions into the weld. Single pass welds should not exceed 1/4" even with the heaviest wire the welder is capable of handling. A thick pass may also begin to cool before contaminates and gas pockets have the time to float out to the surface. It's far better to make multiple smaller passes to complete a plate weld for a higher quality result. For best results, this requires that most joints 1/4" and over be prepared with a grinder to accept multiple weld passes. The weldment edges should be ground to form a V, U or J shaped groove to create a recess where the welds can be welded one on top of another. For welding with .035" wire and under, create a bead no thicker than 3/16" in a single pass, no more than 1/8" with .030" wire, and with .025"wire and smaller no more than 3/32 for best results. This will help maintain proper fluidity of the weld and prevent gas from being trapped in the weld and give time for any minor contaminates to float out of the weld. It will also help to maintain reasonable forward travel speeds. Too slow of travel speeds will create excess build up and can tend to create cold lap at the weld toes resulting in poor tie in. One issue created with a weaving technique even if the metal deposited is the correct thickness is that it can slow the forward progress down. If weaving is too wide, one side of the puddle will cool and oxidize before the torch is brought back across to that side. This is a point where porosity can be introduced.

NOTICE:

This unit features a slow run-in. This means the wire will feed slowly until the arc is started. It is used to improve arc initiation and reduce weld porosity which results in poor fusion during the arc starting process. Once the arc is sensed, the wire speed will ramp up and weld at the selected wire speed.

Component Identification and Explanation

Explanation of MIG Functions and Terms

What Are the Different Kinds of Welds?

Besides a butt joint (Flat edge to flat edge) and lap joint (overlapping edges) which are often used for thinner metal gauges, consider using one of these groove joints for best welding results. When grinding or cutting the bevels, especially with a single V-groove, it may be beneficial to leave a small land with a gap between the joint to achieve full penetration. In this case a temporary backer plate can be used to support the bottom of the weld to create the root pass. The root weld will weld the backer to the main plate. This backer can later be ground or cut off. However, in many cases a plain open root can be used as a backer plate adds to the time and labor involved. A knife edge is also acceptable so long as the joint is fully penetrated when the weld is completed. Open root gaps without a backer can range from 1/16" to 1/8" depending upon wire diameter and application.

When Do I Use Multi-Pass Welds?

When welding material 1/4" and over be careful about trying to put too much metal down in a single pass. Use multiple passes to complete the weld along with any necessary joint preparation especially with wires of smaller diameter. As metal thickness goes up so does the number of required passes. Depending upon the wire diameter and power settings used, a 1/4" joint may only require 1 or 2 passes, but a 3/8" joint in plate metal or pipe will require not only beveling but 4 to 6 overlapping weld passes including a cap and root pass. See Example below.

Joint Preparation

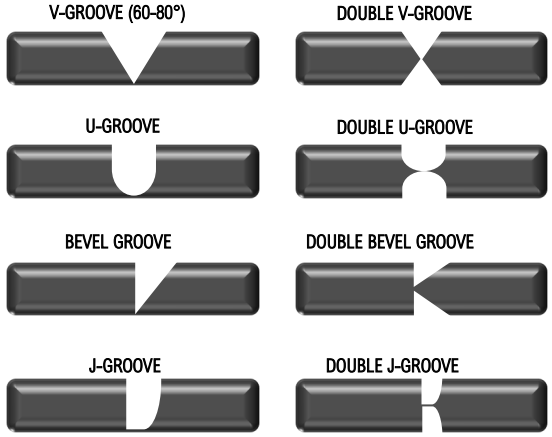

Weld Pass Examples

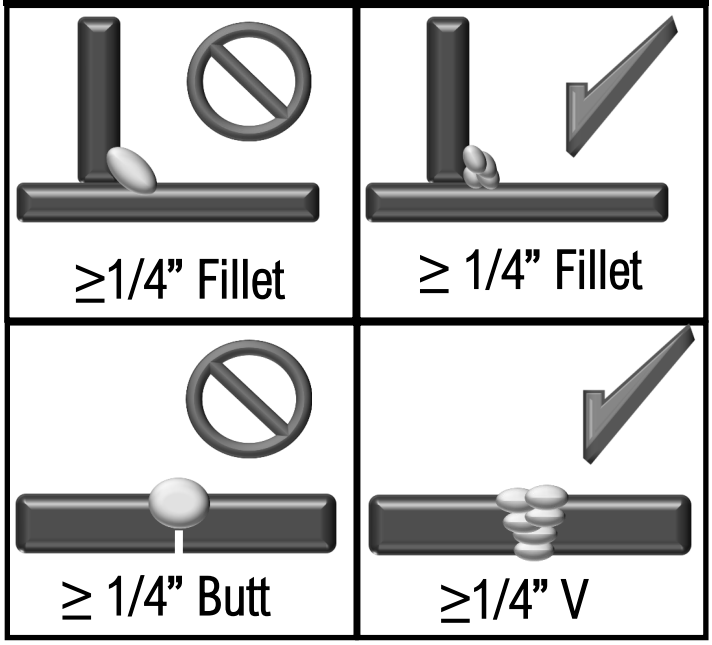

Component Identification and Explanation

Explanation of MIG Functions and Terms

Drag or Push?

MIG Welding is fairly simple if you keep travel angle and direction in mind when welding. See below. If you are welding flux-core, the gun direction is reversed. **Remember: If it has gas, you use a push angle. If it is gas-less you use a drag angle.** *The old welder's saying "If it has slag, you drag." applies to Flux-Cored Wire welding.*

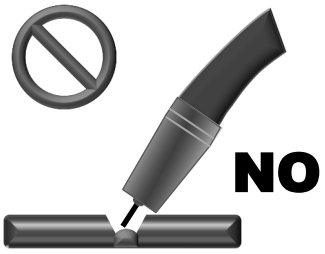	**Problem Technique:** The Gun is not being held vertical from side to side. Wire is not being directed to the center of the puddle. This concentrates heat on one side of the joint and results in poor fusion on the neglected side. It also can create more buildup on one side of the joint than the other. **Correction:** Hold the gun so that the angle of the neck stands perpendicular from side to side.	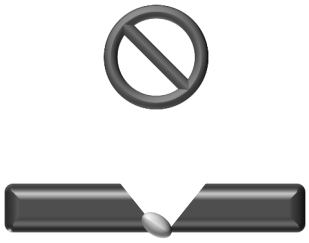
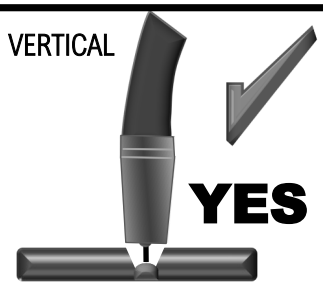	**Correct Technique:** The gun is held in a near vertical position. A variance of 5 degrees or less is acceptable from side to side. The purpose is to prevent the arc from being concentrated on one side of the weld joint or the other. This balances the heat on both sides of the joint and keeps the bead centered. Don't confuse this with push or pull angle in the travel direction.	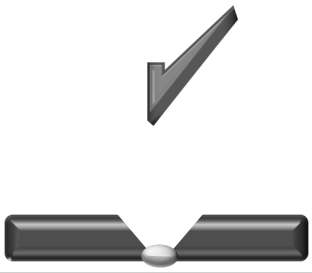
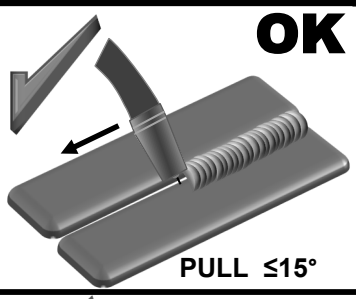	**Correct Technique:** The gun is angled toward the back of the weld when traveling forward. This angle should not exceed 15 degrees. This provides a narrower but more deeply penetrating weld. Use this method when Flux Core wire is being used. Use this method where the unit may be reaching its maximum welding capacity. Not for use with Aluminum wire.	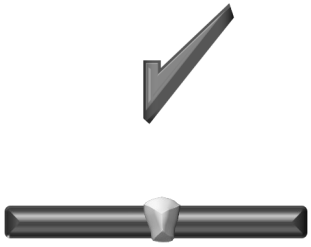
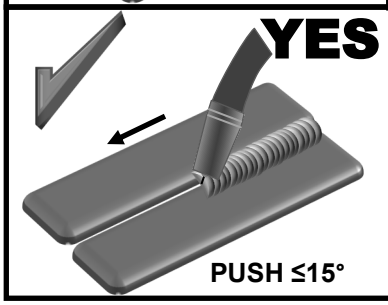	**Correct Technique:** The gun can be angled toward the front of the weld when traveling forward. This angle should not exceed 15 degrees. This provides a wider and generally more pleasing weld. However it is shallower penetrating. This method typically allows a much better view of the arc. Use for most types of welding unless deeper penetration must be achieved.	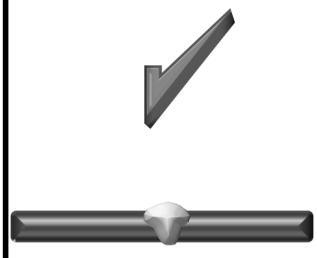

Component Identification and Explanation

North 24 Series MIG Gun

额定值：250A CO_2 220A 混合气体，60% 暂载率。 焊丝直径：0.8-1.2mm。
Rating：250A CO_2 220A mixed gas, 60% duty. wires: 0.8-1.2mm.

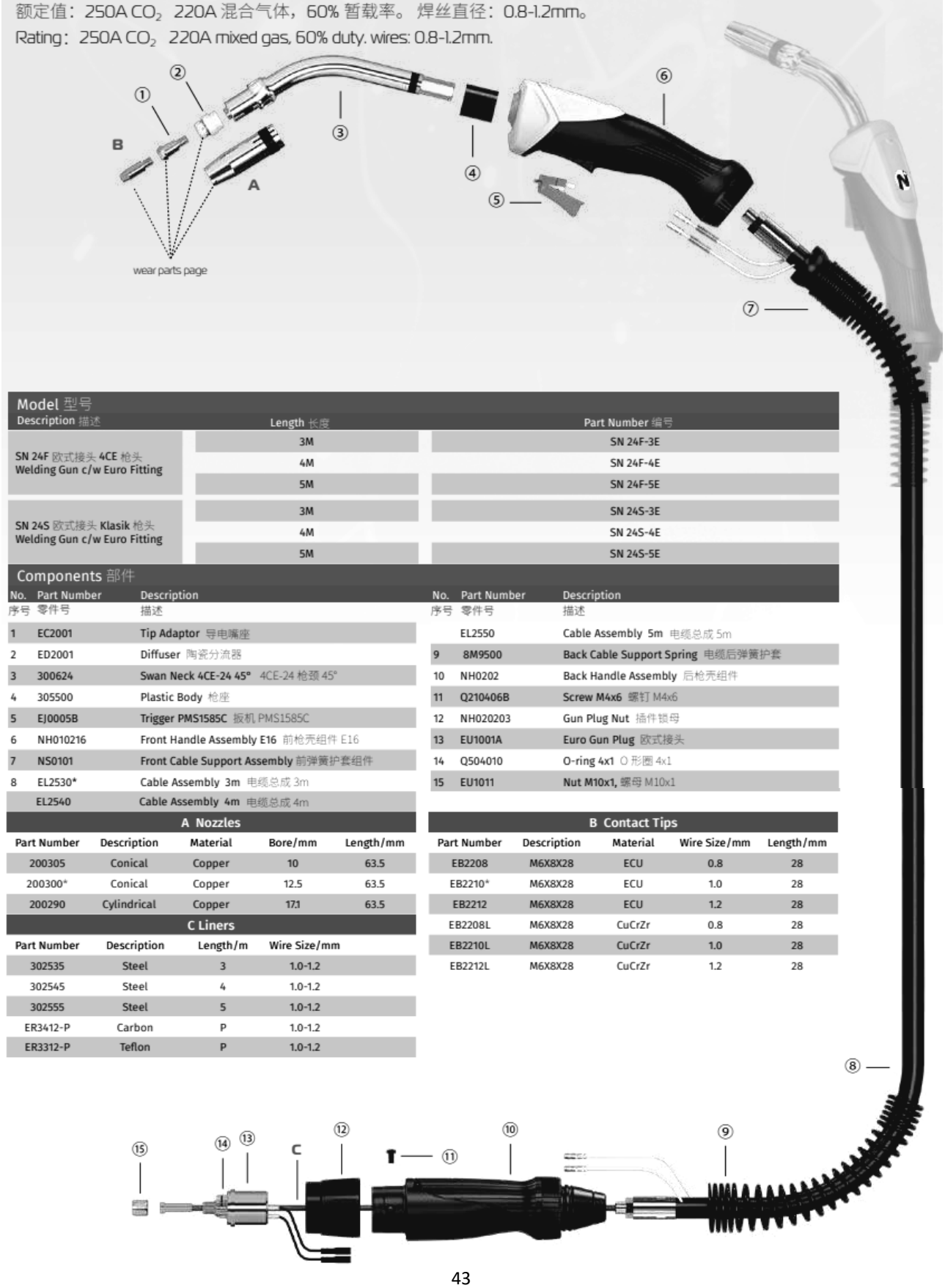

Model 型号 Description 描述	Length 长度	Part Number 编号
SN 24F 欧式接头 4CE 枪头 Welding Gun c/w Euro Fitting	3M	SN 24F-3E
	4M	SN 24F-4E
	5M	SN 24F-5E
SN 24S 欧式接头 Klasik 枪头 Welding Gun c/w Euro Fitting	3M	SN 24S-3E
	4M	SN 24S-4E
	5M	SN 24S-5E

Components 部件

No. 序号	Part Number 零件号	Description 描述
1	EC2001	Tip Adaptor 导电嘴座
2	ED2001	Diffuser 陶瓷分流器
3	300624	Swan Neck 4CE-24 45° 4CE-24 枪颈 45°
4	305500	Plastic Body 枪座
5	EJ0005B	Trigger PMS1585C 扳机 PMS1585C
6	NH010216	Front Handle Assembly E16 前枪壳组件 E16
7	NS0101	Front Cable Support Assembly 前弹簧护套组件
8	EL2530*	Cable Assembly 3m 电缆总成 3m
	EL2540	Cable Assembly 4m 电缆总成 4m
	EL2550	Cable Assembly 5m 电缆总成 5m
9	8M9500	Back Cable Support Spring 电缆后弹簧护套
10	NH0202	Back Handle Assembly 后枪壳组件
11	Q210406B	Screw M4x6 螺钉 M4x6
12	NH020203	Gun Plug Nut 插件锁母
13	EU1001A	Euro Gun Plug 欧式接头
14	Q504010	O-ring 4x1 O 形圈 4x1
15	EU1011	Nut M10x1, 螺母 M10x1

A Nozzles

Part Number	Description	Material	Bore/mm	Length/mm
200305	Conical	Copper	10	63.5
200300*	Conical	Copper	12.5	63.5
200290	Cylindrical	Copper	17.1	63.5

B Contact Tips

Part Number	Description	Material	Wire Size/mm	Length/mm
EB2208	M6X8X28	ECU	0.8	28
EB2210*	M6X8X28	ECU	1.0	28
EB2212	M6X8X28	ECU	1.2	28
EB2208L	M6X8X28	CuCrZr	0.8	28
EB2210L	M6X8X28	CuCrZr	1.0	28
EB2212L	M6X8X28	CuCrZr	1.2	28

C Liners

Part Number	Description	Length/m	Wire Size/mm
302535	Steel	3	1.0-1.2
302545	Steel	4	1.0-1.2
302555	Steel	5	1.0-1.2
ER3412-P	Carbon	P	1.0-1.2
ER3312-P	Teflon	P	1.0-1.2

Component Identification and Explanation

Explanation of TIG Functions and Terms

Alternating Current (AC). Used in TIG mode on this welder to weld Aluminum and Magnesium. It is composed of the flow of electrons rapidly alternating between Electrode Negative and Electrode Positive polarity.

AC Balance. Used to weld Aluminum and Magnesium, the AC wave form is formed by alternating the arc polarity rapidly between the electrode negative and electrode positive poles which changes the flow direction of the electrons. The electrode negative portion of the wave form provides most of the penetration and heat that goes into the weld. The Electrode positive portion imparts a smaller amount of heat to the weld as the flow of electrons travels from the puddle to the Tungsten. However, the Electrode Positive phase of the cycle does provide a scouring action which cleans the weld by removing the oxide layer by literally breaking and ripping up the oxidation, leaving an etched area under the weld puddle area and along the sides of the weld. If the two wave form halves are equal in length this means an equal time is spent between the positive and negative phases of the AC cycle. Even though cleaning is needed, there are problems with AC positive polarity. When the AC cycle enters the positive polarity phase, excess heat builds up on the Tungsten and it begins to ball due to electrons flowing from the weld to the tungsten. Little heat is put back into the weld. Another issue is the excess cleaning can occur and the weld will have wide areas of etching (cleaning) on the sides of the weld, which are generally undesirable. Some transformer welders were able to slightly skew the "balance" of the wave form, making one "half" of the wave form longer than the other "half". In other words instead of having a 50/50 balance, they were able to create a 40/60 balance, but this adjustment was limited With modern inverters, the wave forms are much more adjustable and the balance has even greater adjustment range. In testing even with 5% Electrode Positive can provide enough cleaning to weld, while the other 95% of the arc energy can be put into heating the weld and providing penetration. The ability to adjust the balanced between the positive and negative cycles allows more penetration with less amps, narrower, less unsightly cleaning lines, and the ability to weld without a ball on the end of the tungsten. With the ability to weld without a ball on the tungsten, the arc stays more stable, and is focused more back into the weld. **The range on this unit is expressed as a percent of AC positive, with the idea in mind that "full" AC cleaning is 100% Electrode Positive and 0% electrode negative.** *Some brands express this with a reciprocal value of Electrode Negative.* So what would be a "safe" 30% electrode positive setting on the Everlast, becomes a 70% electrode negative setting on other brands. Everlast, along with other brands has chosen this way polarity orientation since the amount of cleaning is always discussed as a primary concern when welding aluminum. Increasing over 40% on AC balance will cause tungsten to begin to ball. There are legitimate reasons for welding over 40%, as in when the plate is heavily contaminated or oxidized, but if you need over 40% cleaning, you will need to change to a larger tungsten that will maintain the point better. Once the tungsten begins to ball excessively, the arc will begin to wander or may break up completely. Signs of too little cleaning action while welding aluminum include soot, porosity, and dull looking (scummy) welds*. A dedicated stainless-steel brush and suitable aluminum cleaner such as acetone should be used before starting any aluminum weld to help break up the heaviest oxide layer so less Positive polarity cleaning action is needed and better penetration can be achieved by using more Negative polarity during one complete AC cycle.*

What is AC Balance?

See the example below on how the AC balance functions. Keep in mind the AC balance of this welder is a percent of Positive Polarity. A setting of 30%, would be 30% cleaning, and 70% penetration.

AC Wave Form Balanced to 50/50 (Not Ideal)

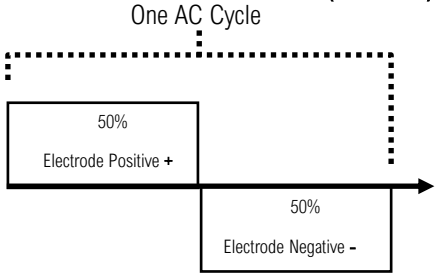

AC Wave Form Skewed to 30/70 (Typical)

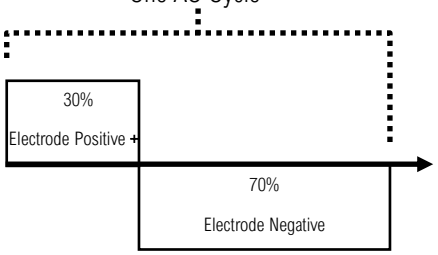

What is the effect of AC Balance?

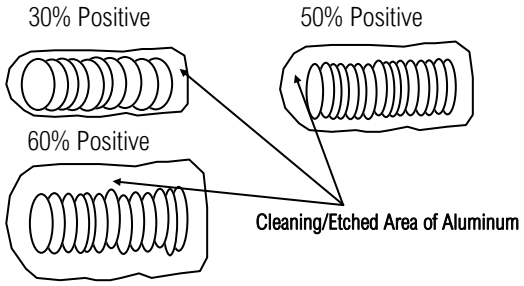

Symptoms of too much Positive Balance: Tungsten balling, wide etched

What Balance Setting is Best?

Start with an AC balance setting of 25 to 35%. This will offer a good compromise between cleaning and penetration. Rarely exceed 40%. 35-40% would be a setting used on dirty cast Aluminum or heavily oxidized material that may have been subjected to salt water previously. Settings above 45% will begin to significantly ball the tungsten and cause arc instability. Maximum setting may cause the Tungsten to erode rapidly.

Component Identification and Explanation

Explanation of TIG Functions and Terms

AC Frequency. AC frequency is the number of times per second that the AC completely cycles between positive and negative polarity. Frequency is measured in Hertz (Hz). One full AC cycle equals 1 Hertz. Standard transformer welders typically have a fixed frequency of 60 Hz (North American market, other regions can be 50 Hz). This is because 60Hz is the standard input frequency from the power company. Transformer welders can only transform voltage and not the frequency of the voltage. The frequency that is input into the transformer will be the frequency that is output at the torch, even though voltage is transformed. In contrast, Inverter welders have the ability to change AC output frequency, despite the input frequency of the voltage. This unit has the ability to control AC frequency from 20 to 200Hz. When operating at lower AC output frequency, the arc is wide and lazy, but puts more heat into the weld. Operating at higher frequency focuses the arc, and pinpoints the heat into a narrower area. Higher frequencies allow better arc focus, *but* it may slow forward travel speed and may increase the Amperage requirement to weld the same part. As AC frequency increases, the pitch of the arc intensifies and the noise will grow louder to an uncomfortable level. It's advised to use hearing protection at higher frequencies.

What Does AC Frequency Control Do?

By increasing or decreasing frequency, the AC Frequency controls arc cone width, overall heat input, travel speed, and directability of the arc while welding in AC mode. See the illustration below for how AC frequency affects the weld.

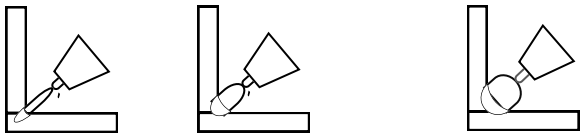

What AC Frequency is Best?

There is no one perfect frequency to use in all circumstances. However, most people agree that frequencies between 90 and 120Hz tend to be a go-to frequency range for most general purpose welding. Of course, higher frequencies may be used in areas where extreme control and pinpoint accuracy is needed. Lower frequencies will vibrate the puddle though, and give great cleaning action, although below 50Hz the arc may feel rough and ragged.

Amps. Shortened from "Amperes." Amps is a measurable value of Current. Amperage is used to refer to the magnitude of Current.

Direct Current (DC). Used to describe one way flow of electrons. Used in TIG to weld Steel, Stainless Steel (Inox), Chrome Moly, Titanium, and more. Not used with Aluminum and Magnesium.

Down Slope. Downslope is the duration of time that it takes for the programming to transition the Amperage from the Welding Amp (or Electrode Negative Amps if Independent Amplitude is selected) to the End Amp setting. Adjustment in Pedal mode will be blocked. This timer controls the decrease of the amperage and provides a window to fill the crater as the puddle begins to cool before the arc terminates. Used with all remote functions except the foot pedal.

End Amps. This is the destination current value set for the end of the weld cycle. When used with the torch switch, this is the final current set used to taper off and fill the crater at the end of the weld. For foot pedal use, this value should be kept at a minimum for proper tail off. However, the Tungsten size will ultimately dictate the exact minimum Amperage that a stable tail off of Amperage can be performed.

Gas Purge. This (MIG/TIG/Plasma) function is useful for setting and testing the gas flow rate. It activates the solenoid and opens it up so that gas can flow freely without having to fire the torch. It should always be used instead of firing the torch to activate the solenoid. The LED will stay lit until it is deactivated. It can also be used as a diagnostic to test gas solenoid valve operation.

High Frequency Start (HF). Depicted as HF on the menu screen under the start function, this is a touchless type of start. It is actually an simulated HF electronic controlled start, but due to the familiarity of users with HF, it is labeled as such to avoid confusion. When HF start is selected, the user positions the torch 1/8" or less above the weld area and either presses the foot pedal or the torch switch and the arc will jump. This HF start is created by an electronically controlled point gap design. A high voltage, low amperage current is created which jumps from the Tungsten to the work piece when activated. Once the machine sends a High Voltage impulse to the torch, the HV energy jumps the gap between the electrode and the work piece. Then, the welding arc will initiate after continuity is established. When continuity is established, the HF/HV shuts off. On this unit the HF parameters can be programmed in the back ground menu. The length of HF start attempt, the strength of the HF arc and the HV impulse Amperage can all be set in the background menu. Once set, these parameters will seldom be changed. If the arc attempts to start longer than the set time, an error code will be displayed temporarily, meaning the switch is either stuck closed, or the arc has been activated too long without an arc start. This helps prevent damage to the machine and chance of accidental shock to the user. Do not "air fire" with the pedal or torch switch unless testing functions. Use the gas purge to set gas flow rate instead of firing the torch. The arc should only be used to strike an arc against the work piece. Arc starting effectiveness at low Amps is related to Tungsten size.

NOTICE:

The HF on an inverter is not continuous. Formerly the term "HF" was synonymous with AC welding as it was required continuously to help stabilize the arc on a transformer welder since switching time in AC was so slow. The two terms were often confused used interchangeably. Inverter switching frequencies are so rapid that the need for continuous HF overlay is eliminated. HF now refers to the HV arc start.

Explanation of TIG Functions and Terms

decrease of the amperage and provides a window to fill the crater as the puddle begins to cool before the arc terminates. Used with all remote functions except the foot pedal.

Lift Start. Lift start requires touchdown and lifting up of the Tungsten to start the Arc. It is usually used only with DC output since some contamination of the tungsten is possible. But it can also be used with AC where HF energy is prohibited, such as in a hospital environment. *There are two types of Lift Start.* The first, which is not equipped on this unit, is a live lift start. This means the tungsten is always electrically live until the arc is started. When the tungsten is touched to the metal, continuity is sensed and the welder sends welding power as soon as the continuity is broken. If you need this type of start on a welder, contact Everlast for other product information. The other type of lift start is a "remote lift start." It functions and starts with essentially with the same concept except, the tungsten is not electrically live and a torch switch or foot pedal must be used to make the torch live after touching down. It's useful for 2T/4T DC work as well.

Post Flow. Post Flow is the amount of time (in seconds) that the shielding gas flows after the arc is terminated. This is an important function. The flow of shielding gas after welding is stopped helps to 1) Cool the torch and tungsten and prevents oxidation of the tungsten as it cools. 2) Provide cooling and shielding while the weld puddle solidifies and cools. This helps to prevent the weld from forming porosity and prevents oxidation of the weld as it cools. Post Flow should be increased at the Amperage increases. **For simple calculation, add one second of Post Flow for every 15 to 25 Amps used. At a minimum, 2 to 3 seconds should always be used.** To properly use Post Flow, the torch should be held in place over the weld after termination until the gas shuts off.

Pre Flow. Pre Flow is the amount of time (in seconds) that the shielding gas flows before the weld starts. It is very important that the Pre Flow be set for at least a short flow before any weld. The Pre-Flow not only purges the torch of any contamination, but it also establishes a protective envelope of shielding gas around the weld before the arc initializes. This protects the tungsten, and helps to establish an arc more quickly by surrounding the tungsten and work with more easily ionized gas so that arc starts are more efficient. It also allows time for the gas flow to stabilize before the arc is struck. When initializing the Pre Flow a "rush" of gas can often be heard just ahead of the arc strike. Then the gas flow will quieten down as the weld begins. This is normal. This rush of gas is caused by several things, but it is in part due to regulator attempting to regulate the sudden rush of gas. As it does this, extra gas may be consumed until the regulator has had time to react. The extra flow of gas may create turbulence around the weld. The Gas flow rate may also temporarily increase due to the back pressure "ballooning" of the gas lines. As the slightly swollen gas lines stabilize, extra gas is propelled as the solenoid opens relieving the back pressure. Using .3 to .7 seconds is usually enough to allow the "gas rush" to stabilize, unless extra large shielding cups are used. If longer gas lines are used, increase to 1 to 2 seconds (>15ft).+

NOTICE:

The arc start will be delayed by the amount of time chosen for Pre Flow. If Pre Flow is set for 2 seconds, the arc will not start for 2 seconds. This is sometimes easy to forget, especially when tacking or "Bump" welding.

Pulse. The TIG pulse creates two amp values, a high and a low value that cycle back and forth between each other while welding. This helps preserve travel speed while reducing the size of the Heat Affected Zone (HAZ). The pulse is divided in to two phases or stages. The upper amperage phase is called Welding Amps, which is sometimes referred to as Peak current. When Independent Amplitude is selected, the Electrode Negative location serves as the High Amp "Peak" phase of the pulse. The lower amperage phase is called "Pulse Amps" (sometimes called "background" or "base" current). The Pulse Amps are set as a percent value of Welding Amps/Electrode Negative. Pulse has several uses and can be used to control arc directability, arc cone width, heat spread, penetration, travel speed and even weld appearance. It is particularly useful on metals that are prone to structural deterioration from the HAZ or burn through. Pulse is used strategically to create a lower average Amperage, by varying one or more of several adjustable pulse parameters to reduce heat input.

1. **Pulse Amps (Base)**. Base Amps is the low Amperage value of the pulse. When you adjust the base Amps in pulse mode, you are actually setting a ratio of base Amps to peak welding Amps. Base amps are expressed as a percentage of Peak welding Amps. So, when you set base amps, you are only setting it as a percentage, not the actual Amps. As you increase Peak welding Amperage through the use of the foot pedal, or the panel control, the pulse will maintain the same ratio of Base to Peak welding Amps, raising the base Amps automatically. To illustrate: Adjust the Peak (main welding) Amps, to 100. Set the base Amps to 50%. This will yield a 50 Amp value for the base Amps. The foot pedal controls both Peak welding Amperage and Base Pulse Amperage simultaneously, using the pre-set ratio. *For Adv. AC Pulse, this is the DC portion of the Pulse.*
2. **Pulse Frequency (Hz).** Pulse speed is referred to as Frequency, which is measured in Hertz. Pulse frequency controls the arc constriction and also helps with heat management. A slower pulse frequency around 1 to 3 hertz gives the "stacked dime" appearance. At higher frequencies the "stacked" appearance will be lost while heat control is increased. This is also referred to as "Pulses Per Second" or "PPS".
3. **Pulse Time On (Balance/Duty Cycle).** Pulse Balance is the percentage (%) of time that the pulse stays in the TIG (Peak) pulse Amp phase of the cycle. Increasing the Pulse time-on will increase the duration the Peak Amp phase of the cycle which in turn will increase the heat and will increase penetration. Pulse Balance is also known in the industry as "duty cycle". For TIG welding purposes the term "Pulse Time On" is used here.

Setting up TIG pulse is not a one-size-fits-all process. There's no template or list of settings that can be offered to the user that will work in all situations. It's very difficult to offer pulse setting lists for even well-defined applications. Even though the PowerSet menu does offer a preset functions for pulse, it still gives 10 choices to choose from so the user to se-

Component Identification and Explanation

Explanation of TIG Functions and Terms

lect the best operation. Even then none of them may be suitable for the user, depending upon personal preferences, skill and understanding of the pulse. Changes to any one pulse parameter, whether it be frequency, balance or Amperage will skew the effect of the pulse. Keep this in mind when making changes and make only small changes to one parameter at a time to dial in the desired effect.

A slow pulse between .7 and 2.5 Hz with an equal 50% pulse time on and somewhere around a 30-60% Pulse Amp setting can be used to help with timing the addition of filler metal to the weld puddle. This type of setting will improve bead appearance. A high pulse frequency that is combined with complimentary settings of 50% or below Pulse Time On and a low pulse Amps settings of 40% or below can be used to prevent burn through and speed up welding on thin materials. It can also help maintain a proper bead profile on a thin edge weld or prevent burn through on extremely

thin metal. A fast pulse speed will make fine ripples in the weld while a slow pulse speed will give a much more coarse, but visually appealing result. There are limitless ways to adjust the pulse. Regardless of how you choose to adjust the pulse, always keep in mind, that the basic purpose of the pulse is to average the heat input while maintaining penetration and welding speed.

AC Pulse TIG operation setup is the same. Do not confuse alternating polarity between Electrode Positive and Electrode Negative as pulse. It is not. You are still adjusting the amperage of the AC pulse, and skewing the balance and changing the frequency similarly to the DC pulse.

In Advanced AC mode, this is a "mix" mode of actual AC and DC current, where each pulse cycle contains both AC and DC current. This can be used to greatly increase the welding range (and penetration) of the welder by up to 50% or more while welding Aluminum. The AC portion of the pulse (when properly adjusted) provides adequate cleaning action, in front of the DC portion of the cycle which comes on to provide penetration in the area just cleaned. In the hands of a skilled operator, It can also be used to adjust bead profile and even tungsten life. The AC phase of the pulse cycle is assigned to the Peak Welding Amps (or Electrode Negative if the Independent Amplitude is activated) portion of the cycle. The DC portion of the pulse cycle is assigned to the "Base" Pulse Amps of the Cycle. The AC phase of the pulse is set in actual amps, whereas the DC portion of the cycle is set as a "percent" of the AC welding Amps. Increasing the percentage (%) of DC Pulse to AC welding Amps increases penetration. For maximum penetration and power, set DC to 100%. The Pulse time on and frequency act the same as in standard pulse, but when fine tuning, the Pulse Time on is used to adjust the total amount of cleaning given to the weld area before the DC portion of the pulse cycles on. Frequency can be adjusted for welding speed needed and to establish a more steady transition between AC and DC portions of the pulse cycles. The initial use of this mode may be disconcerting as the constant "on/off" nature of the Buzz may be heard. Timing of the addition of the filler rod may be also thrown off initially, but with practice, this feature can be used as a valuable tool. When DC is adjusted to a low % setting, while welding on thin metals, the bead profile will change and additional control will be given.

Is There a Better Way to Understand Pulse?

Pulse is essentially a wave form created by the pulsing amperage. This wave form can be skewed, expanded, compressed, increased or decreased in magnitude. Each change in Amps, Pulse Time On Balance, and Frequency all affect average heat being put into the weld. The examples below attempt to explain the parts of the pulse and how each part of the pulse functions. *Examples not to scale.*

EXAMPLE 1
Peak Pulse Amps: 100 amps,
Base Amps: 50%
Pulse Time On: 50%
DC Pulse Frequency: 1 Hz

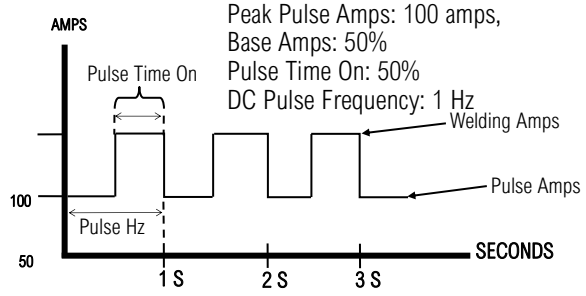

EXAMPLE 2
Peak Pulse Amps: 100 amps
Base Amps: 50%
Pulse Time On : 50%
DC Pulse Frequency: 25Hz

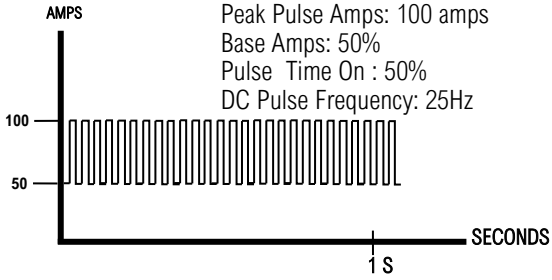

EXAMPLE 3
Peak Pulse Amps: 100 amps
Base Amps: 25%
Pulse Time On: 75%
DC Pulse Frequency: 3 Hz

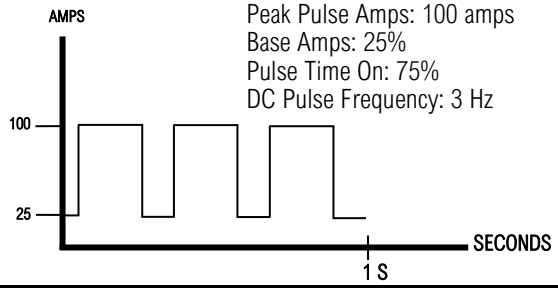

Regulator./Flow Meter Controls the flow rate of the shielding gas at the cylinder. The regulator should never be left turned on. Leaks can and do develop over time or suddenly. Gas solenoids can fail to close properly. Whenever a regulator is not in use, the pressure should be relieved so that the diaphragm/spring will not prematurely fail or lose accuracy.

CAUTION: *Always open the regulator slowly, while standing to the side so that if it were to fail parts will be ejected away from you. Never stand over a regulator while opening.*

Remote. Remote refers to the ability to start the arc and control the weld cycle at a distance. High Frequency Start must be used with a remote to

Component Identification and Explanation

Explanation of TIG Functions and Terms

What Are The Adv. AC Pulse Components?

Advanced AC Pulse is a mix of both AC and DC. This type of pulse is designed to increase weld capability in AC mode up to 50%. The DC, which is in the Pulse Amps location can be set up to 100% of the AC (or 100% of EN Amp value if Independent Amplitude is active) to provide a powerful alternating punch. The AC side of the pulse scours the surface ahead of the DC "hit" of the pulse, so the DC Amperage is punching through cleaned metal. This type of pulse can also be used on thin metals to achieve improved bead shapes when DC Amps is turned down. Adv. AC pulse offers interesting possibilities of increased performance. Combined with Independent Amplitude, it shows promise to completely change the normal accepted Amperage capability limits of AC welding.

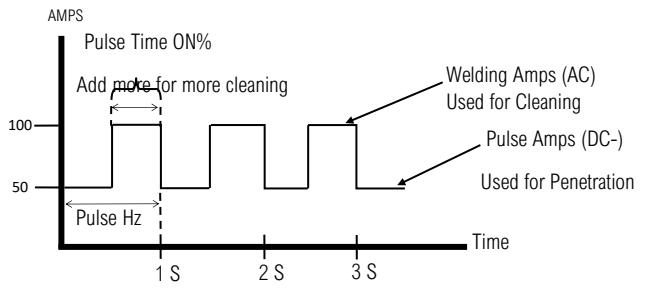

operate. Lift Start can also be used with a Remote. A remote can be a foot pedal, torch switch, torch mounted slider or hybrid Amp-trol torch. All of them are used to start and end the arc as well as control other parts of the weld cycle to varying extents. The unit has multiple Remote settings to choose from. 2T/2TS/4T/4TS settings all must be used with a remote switch. Pedal mode is reserved for use with a Foot pedal or slider Amp control mounted on the torch handle. The hybrid torch switch/amp-trol must be used with the special 2T+ Amp and 4T+ Amp controls (formerly 2T+Finger/4T+Finger).

Pedal mode is the most straight forward. Operation is quite simple. The maximum amperage is set on the panel. Then the foot pedal is used to start and stop the arc as well as vary the amperage from the minimum welding setting, up to the maximum welding setting selected on the panel. When used in pedal mode, many weld cycle parameters will not be available for adjustment since the pedal itself controls those functions manually.

Shielding Gas. Shielding Gas is necessary while TIG welding. The shielding gas used for the TIG process is 100% Argon. Shielding gas protects the weld from oxidation by the atmosphere while the weld puddle is still molten. Gas flow rates are controlled by the supplied regulator. Too little gas flow will cause porosity, heavy scale and or oxidation. Too much gas flow is wasteful and can also create a turbulent flow, which can pull the atmosphere into the weld, creating oxidation. *See suggested flow rates.*

Start Amps. This is the initial Amperage of the weld in TIG mode. This is the starting point, at which the arc initiates. The Start Amps may vary depending upon the type remote used and upon the Tungsten dimeter.

The Tungsten size function dictates the minimum Starting Amperage so that the best start can be obtained. However, it is not the absolute lowest limit. To obtain complete control over the Start Amp parameter, set the Tungsten function to "Manual." Start Amps may be set higher than the Welding Amperage, but more rapid wear of the Tungsten may result.

Stitch. The Stitch function can be used with both the Spot and Fast-Tack function. Whereas the Spot/Fast Tack function is a "Arc-On" timer, the Stitch timer is an "Arc-Off" timer which works if the switch is continually held. This creates a repeating on/off cycle that is useful for welding long seams of sheet metal, or creating regular sized spot welds along a object while tacking up for fitment. When used with Fast-Tack, this can be used to create a rapid succession of flash welds that help weld thin materials together with a fine, thin weld bead.

Up-Slope. Upslope is the duration in time that it takes for the programming to transition the Amperage from the Start Amp value to the Welding Amp (or Electrode Negative Amp if Independent Amplitude is active) value. If Start Amps are set higher than the Welding Amp values, then technically it will down slope to the Welding Amp value. However high start Amp values can increase Tungsten wear. Used with all remote functions except the foot pedal.

Wave Form Control (AC wave shape). This controls the shape of the waveform that is created by the AC mode, as the arc cycles between electrode negative and electrode positive polarity. The wave form created by traditional power companies is considered to be a sine wave. This sine wave, when viewed on an oscilloscope is very smooth and regular, and even rounded at the peaks and valleys of the wave form. With an inverter welder, pre programmed wave forms can be generated. Each wave form has special weld properties and a different appearance on the oscilloscope. As a summary explanation:

Advanced Square Wave: This is the default wave form to be used in most situations. The shoulders and tops of the wave form are square with an immediate transition between Electrode Negative and Electrode Positive half cycles of the AC wave form. This wave form introduces the most heat to the weld and provides the fastest wet in, but is the harshest overall. Arc stability and directability are excellent. In general though, use this wave form for most applications. If using the welder in a split wave form configuration, the Adv. AC offers a good base wave form for the Electrode Negative half-cycle for excellent penetration and wet in. In most, but not all cases, it would not be considered for running in the Electrode Positive half wave cycle in the split configuration. Use with Lanthanated Tungsten.

Soft Square Wave: This is a square-type wave form, with more rounded shoulders. This is the wave form generated by most transformer square-wave welders. It isn't as aggressive or as quick to wet in, but is a satisfactory wave form form to use when a balance between quick wet in and a generally buttery, but controllable weld. This is less likely to consume

Explanation of TIG Functions and Terms

Tungsten as rapidly, but some "heat" loss going into the weld will be experienced. If used in the Split wave form configuration, it offers good utility when used with other wave forms on both EN– and EP+ sides of the wave form. Use with Lanthanated or Ceriated Tungsten.

Triangular Wave: This wave form provides the least amount of heat and is used on thinner gauges of aluminum. This provides a longer lasting point, and a better bead profile on thin metal gauges. Due to the triangular shape of the wave form, the current only stays at the peaks/valleys a fraction of the time of any other wave form lower output amperage from what is set. The gradual transition of the wave form makes it the best wave form to use for welding thin gauge metals when used in a balanced wave form configuration. When used in the Split wave form configuration, it serves well on either the Electrode Positive or Electrode Negative side of the AC cycle. Use Lanthanated or Ceriated Tungsten for this wave form.

Welding Amps. This is the main default current control. When used in the context of Pulse, this is the "Peak" part of the pulse while the Pulse Amps is the "Base Amp" part of the pulse. Without Pulse, the main welding amps simply controls the Amperage of the welder.

Component Identification and Explanation

26 Series Air-Cooled Welding Torch (Typical Type) Parts and Assembly. DC: 200A @ 60% Duty Cycle; AC: 175A @ 60% Duty Cycle

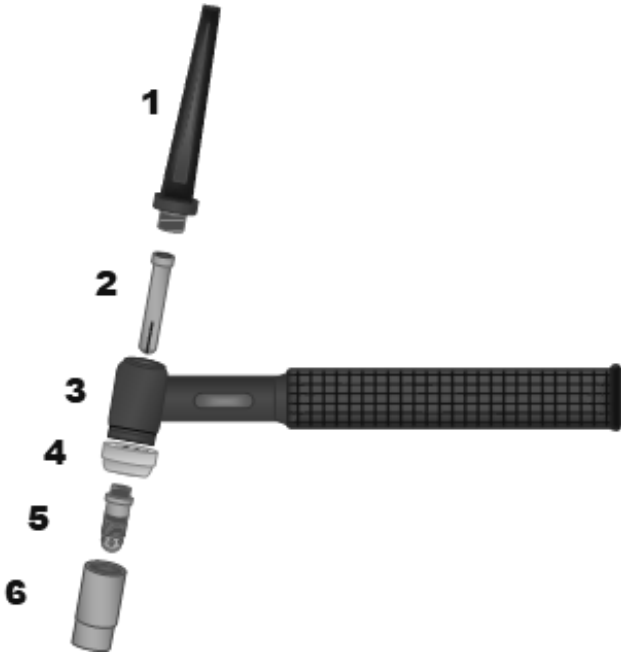

Typical Everlast and NOVA Torch Assembly (17,18, 26 Series)

(Some parts may not appear exactly the same but are equal in assembly order and type.)

Tungsten not included, but available in select Consumable Kits on the website at www.everlastwelders.com.

#	Description	Size/Type	Part#	Alternate Ref.	Note
1	Back Cap	Long	NVA57Y04-3	57Y02	
1	Back Cap	Medium	NVA41V35-3	41V35	Or 300M
1	Back Cap	Short	NVA57Y04-3	57Y04	
2	Collet	.040”	NVA10N22-3	10N22	1.0mm
2	Collet	1/16”	NVA10N23-3	10N23	1.6mm
2	Collet	3/32”	NVA10N24-3	10N24	2.4mm
2	Collet	1/8”	NVA10N25-3	10N25	3.2mm
3	Torch Body/Handle	17,26, or 18	Call for App.		Varies by Type
4	Heat Shield	17/26/18	NVA-HS172618	Heat Shield	Interchanges with similar aftermarket
5	Collet Body	Universal one size fits 1/16” to 1/8”	Stock	Stock	Universal Collet Body and Collets supplied with original starter kit
5	Collet Body	.040”	NVA-10N30	10N30	1.0mm, match to collet size
5	Collet Body	1/16”	NVA-10N31	10N31	1.6mm, match to collet size
5	Collet Body	3/32”	NVA10N	10N32	2.4mm, match to collet size
5	Collet Body	1/8”	NVA10N28	10N28	3.2mm, match to collet size
6	Cup	4	NVA-10N50-3	10N50	Standard, non gas lens 1/4”
6	Cup	5	NVA-10N49-3	10N49	Standard, non gas lens 5/16”
6	Cup	6	NVA-10N48-3	10N48	Standard, non gas lens 3/8”
6	Cup	7	NVA-10N47	10N47	Standard, non gas lens 7/16”
6	Cup	8	NVA-10N46-3	10N46	Standard, non gas lens 1/2”

Component Identification and Explanation

SELECT THE PROPER TUNGSTEN TYPE.

What Type of Tungsten Do I Use?

Selecting the correct tungsten for your welder is important. Modern inverters no longer use pure (green band) Tungsten for welding AC. In fact pure Tungsten used with an inverter can create problems with arc stability, arc starting and excessive balling. While Thoriated 2% Tungsten can be used in an inverter for DC welding, and even for AC welding, it is falling out of favor in the industry due to the slightly radioactive nature of it. It also presents some additional issues while welding with nodules and splitting at the higher Amp range in AC.

For welding in AC and DC consider the following types.

- Lanthanated 2% (blue band). Overall this is one of the best choices for TIG welding and can be used for AC and DC welding. It has great arc starting characteristics, with excellent point holding capability.
- Ceriated 2% (gray band or orange band, depending upon brand and country of origin). This is a good choice for welding with both AC and DC. However, it doesn't hold up as well and starts to erode faster than Lanthanated at higher amperages. Arc starting quality is excellent.
- Lanthanated 1.5% (gold band). Holds up nearly as well as Lanthanated 2% and can be used for AC or DC welding. In some tests it has rivaled the performance of Lanthanated 2%.
- Tri-Mix/Rare Earth (purple, turquois or other color band). While still relatively new, it is being marketed as a replacement for Thoriated 2%. Overall, it does perform fairly well and even excels in many circumstances. But some problems have been seen with quality control and inconsistency in performance. The primary metal oxide used is lanthanum 1.5%. Usually it also includes a small percent of Zirconium and Cerium to complete the mix. Some use Yttrium. But the balance of the components in the blend are usually stated to be around .06 to .08%, but can be allowed to vary up or down from .04% to .9%, making the blend prone to inconsistency in quality control.
- Thoriated 2% (red band) Still considered the best for DC, works ok for AC, but has been banned in many markets outside the US due to a small radiation risk posed as an alpha emitter.

Do not use the following types of Tungsten.

- Pure Tungsten (green band). This will create arc instability. The tungsten will not stand up well to the more intense arc created by an inverter welder.
- Zirconiated Tungsten (white band). This was created as an alternative for pure Tungsten for transformer welders. Similar issues welding issues are presented as with pure Tungsten.

Purchasing Tungsten can be difficult. Local suppliers tend to put a premium price on Tungsten, and may be three times an online price direct from a distributor. In many areas, the choice of tungsten may be limited. However, many local welding suppliers are stepping up and offering competitive prices and range of selection, so don't rule them out until you have checked. Also, there are some companies that may send you free samples to test, so be sure to investigate their product, and give them a chance as well.

GRIND THE TUNGSTEN CORRECTLY.

An improperly ground point on tungsten is a cause of many issues with arc stability, arc directability, and penetration. A bench grinder and a fine-grit stone dedicated for tungsten sharpening is all you need to sharpen Tungsten and is the age old standard. There are special hand held grinders that feature diamond stones with slotted guides, designed to hold the tungsten at the exact desired angles. A dry chemical sharpener "dip" is available and is inexpensive. When properly swirled, it does an excellent job in seconds. With practice, it can deliver a superior result. As a bonus feature, chemical sharpening can be done without getting up from the bench-top without removing the tungsten from the cup. One thing to note: the Tungsten has to be red hot before being dipped and swirled in the chemical.

⚠ WARNING!

Wear safety glasses and leather gloves while grinding tungsten or serious injury may occur. On occasion tungsten may split or shatter. Do not breathe or inhale tungsten dust. **Do not use a angle grinder to grind!**

How Do I Grind My Tungsten On a Wheel?

- Grip the Tungsten firmly. Grind with the Tungsten secured.
- Grind the Tungsten perpendicular to the wheel face. Allow tungsten to grind slowly without much pressure.
- Rotate the Tungsten quickly as it is being ground to keep the point even and symmetrical.
- Do not grind the Tungsten parallel to the wheel face or an unstable arc will result.

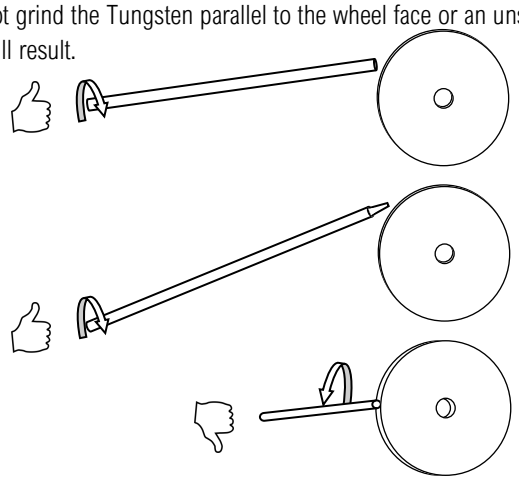

Component Identification and Explanation

Choosing the proper grind angle is important to achieving the weld penetration, bead appearance, and arc-cone width that you desire. While there is no true one-size-fits-all angle, there are some general rules of thumb to observe and follow:

- Always grind in-line with the length of the tungsten. Never make a radial grind that leaves marks on the tungsten in the direction of the grind. Radial marks will cause arc instability. Never grind with the tungsten held parallel to the stone edge face.
- For most applications, grind a point that is 2 –2.5 times greater in length than the tungsten is wide. This will create an angle of about 30° to 35°.
- For AC, a more blunt angle may be used (around a 60°) for best penetration. However, the 2 to 3 times in length rule will still work for many circumstances.
- For higher amperages, you will want to put a slightly truncated tip on the tungsten. This prevents the tip from dropping into the metal.
- Grip the tungsten firmly. Slowly rotate it while grinding.

What Type of Grind Works Best?

- Never use a radial grind pattern. This can be caused by grinding at the wrong angle, or spinning the tungsten too fast while grinding at the proper angle. The arc will be unstable.

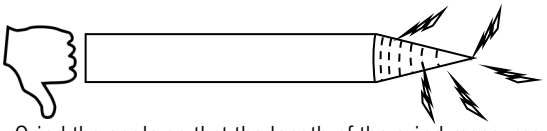

- Grind the angle so that the length of the grind measures 2 to 2.5 times the wide of the tungsten (For general purpose use this should form about a 30° to 35° angle.) A slightly blunted end (truncated) may be used if the amperage is over 50A to prevent the tungsten from breaking off into the metal while welding.

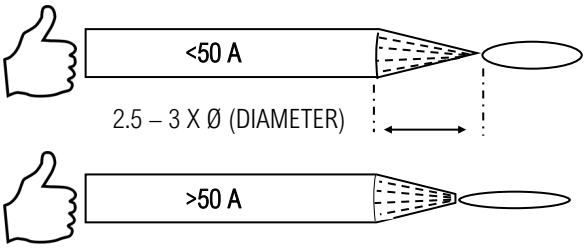

- AC welding may require a blunter point for some applications where greater penetration is desired. It may seem counter-intuitive, but this will create a narrower arc cone and provide more penetration.

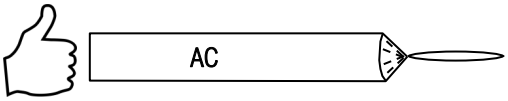

Depending upon what arc properties you are looking for, you may periodically want to regrind your tungsten to maintain optimal arc characteristics.

IMPORTANT! Don't Ball The Tungsten.

If you've ever operated an older transformer welder, or an early inverter type TIG welder, you were probably taught to ball the Tungsten when welding on AC. In fact, a lot of well meaning literature still exists about proper tungsten ball size, how to ball tungsten, etc. Even now, well-meaning instructors and seasoned welders (who have never worked with an inverter) may even insist this is the way to weld.

However, this is no longer true or recommended with an inverter TIG welder. In fact, if you insist on balling tungsten while welding with an inverter, you are going to create an unstable, uncontrollable arc. You will then have to make unwise adjustments to the machine to create more stability. Be warned. Don't blame the machine. Blame the ball.

Why? The old "Green" Tungsten is considered to be pure Tungsten. This means that it does not handle heat as well at higher temperatures as the more modern tungsten types that are blended with rare earth metal oxides. Green Tungsten will create a significant ball on its own when it is used with an inverter. In the past it was needed to hold a certain type of arc cone and was desirable. In inverters, it will lead to arc wandering.

Due to the nature of the AC cycle and modern advancements in control, modern inverters with advanced wave forms really punishes pure Tungsten. You'll quickly end up with a large, molten ball dangling at the end of the tungsten. This is, in part, due to the short off-time between polarity change from + to - and back to + during the AC cycle. In fact, this off-time is so short that inverters do not need High Frequency Stabilization (HF) while welding AC, and do not have it. In fact HF is only used for establishing the arc. After Arc establishment, the HF shuts off automatically. The extra "time-on" of the arc means that pure tungsten (green) isn't able to handle the heat and will over-ball and melt quickly. Rare-earth blends of Tungsten are used for that reason and will handle the heat and punishment better. If given enough heat at the high end of the operating range of a specific sized diameter, the rare earth types form a neat bullet-shaped dome that is slightly elongated. However, this dome still isn't quite yet a full, rounded ball.

If you think about it, the big ball at the end is really a large "target" for the arc to jump to as it reverses polarity. When the electrons begin to flow from the plate to the tungsten, that is a bigger target for the electrons to hit. The arc could literally jump anywhere along that balled surface. The bigger the balled target, the more room for the arc to oscillate around the ball, creating a randomly wandering arc. This is why pointed Tungsten is recommended with inverters.

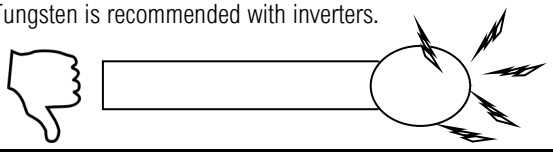

Component Identification and Explanation

SELECT THE PROPER TUNGSTEN SIZE AND START AMPS.

The key to obtaining good, picture-perfect arc starts is to use properly sized and ground Tungsten. A properly sized Tungsten, combined with correct sharpening technique will display the best arc characteristics. An undersized tungsten will tend to ball at higher amperages, especially if the tip is too sharp for the application. A larger Tungsten will be more difficult to start at lower amps, regardless of grind shape. A contaminated Tungsten, will cause no-starts, irregular starts, and wandering arcs.

For best results, when low amp starts are needed for welding thin gauge materials, use a 1/16" diameter Tungsten for most light gauge materials. For thin materials under 20 gauge use a .040" diameter tungsten or even a .020" diameter tungsten for maximum control. Arc starts will then be clean and crisp on thin materials. Keep in mind though that small diameter tungsten will rapidly consume at higher Amperages.

The tungsten type, tip angle and grind preparation will ultimately affect amperage carrying and arc starting capability of the tungsten. The machine wave form and other AC settings can also affect it. Each type of Tungsten blend will also vary in amperage handling capability. In general, consider the following for selecting your tungsten diameter. The list below is not the absolute maximum range of the Tungsten, but a reliable recommended range. It is a good practice when you approach the maximum limit of the Tungsten's capability in terms of amperage, that you switch to the next size up for best point retention and arc characteristics. **AC operation can reduce tungsten amperage capability.** The setting of the AC balance and AC frequency has an effect on tungsten point holding capability. Too much cleaning (over 40% EP) will over heat the tungsten and ball it. Lower frequencies tend to places more heat on the tungsten as well. But in general, for AC and DC operation, consider using the following sizes for the ranges following:

- 10-30A: 40" (1mm)
- 10-70A: 1/16" (1.6mm)
- 15-200A: 3/32" (2.4mm)
- 20-225 A 1/8" (3.2mm) (Capable of 20-250+A)

NOTES:

- *Starter kit does not include .040" (1mm) collets or collet bodies. These can be purchased locally or online.*
- *On AC, the unit's minimum TIG amperage is 20A. On DC it is 10A*
- *Unit reaches a maximum of 225A on DC so max amp capability of 1/8" tungsten is greater than 225A.*
- *The recommendations are based off of using 2% Lanthanated Tungsten.*

How Do I Perform an HF Start?

1. Place the point of the tungsten 1/8" or less over the work piece.
2. Press the torch trigger or foot pedal, and the HF spark will be emitted. It may appear as small sparks or lighting if the arc doesn't start immediately. (If Live Lift is used, no pedal or trigger is required.)
3. Once continuity establishes, the welding arc will begin. You may begin to advanced the torch when a puddle forms. Maintain 1/8" height or less while welding.

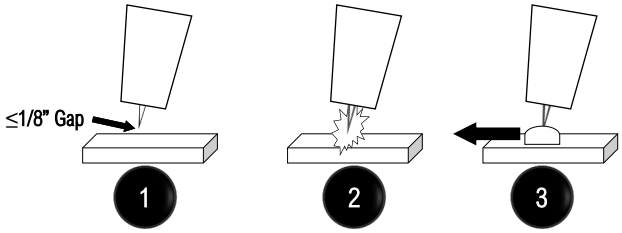

How Do I Perform a Lift Start?

1. Rest the edge of the cup on the work piece so that the tungsten is slightly off the work. Press the trigger or foot pedal. Quickly rotate the tungsten to the work using the cup edge as a pivot.
2. A small spark may be noticed as it touches. Once the Tungsten touches, quickly and seamlessly rotate the cup back to draw an arc.
3. Raise the cup to establish the arc to 1/8" or less in height.
4. Allow the puddle to form and move the torch forward maintaining 1/8 or less height.

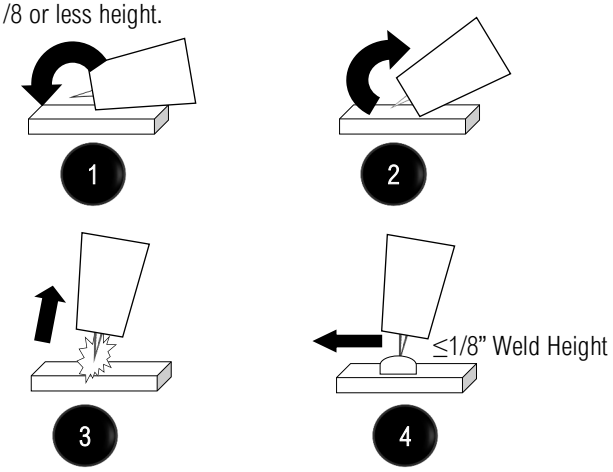

Component Identification and Explanation

Explanation of Stick Functions and Terms

Arc Force. Arc force is used to offset the loss of overall wattage (V x A = W) as the arc length is shortened and voltage begins to drop while stick welding with short arc conditions. It offsets the drop in voltage by injecting extra amps into the weld when voltage drops below the 20V threshold. This enables the amperage to react aggressively or mildly, depending upon settings. It also helps to prevent arc outages, and allows the user to hold a tight arc and maintain better control. This function is also referred to as "Dig" and "Inductance" in the industry. Arc force is set as a percent of Amps over the set welding Amps. As the welder nears the top end of the Amp rating for stick welding, Arc Force action will be reduced due to less compensating Amperage being available for use. This will happen regardless of Arc Force Setting. Typically Arc force settings with rods such as E7018 and E6013 should be set to around 20 to 35%. Arc force for Cellulose based Flux rods such as E6010 and E6011 is 60% or greater.

Direct Current (DC). This is the preferred method of stick welding. For most applications, the electrode holder will be connected to the Positive terminal. The welder will remind you of this polarity. However, there are a few times where Electrode Negative may be used. To use electrode negative polarity, all you need to do is swap the electrode hold and work clamp positions so that the electrode holder is in the negative terminal. This will not harm the machine. Follow electrode manufacturer's recommendation for Polarity and Amperage range.

Hot Start Amps (Intensity). This setting controls the intensity of the arc start by boosting the initial amps at the start of the weld cycle. It is used to improve arc starting and reduce the time needed to establish a puddle and helps to prevent porosity at the beginning of the weld. The Hot Amps are set as a percent of Amperage over the welding Amps. Maximum Hot Start action may be limited by available Amperage for stick welding. As the current is raised near the top Amperage of the welder, Hot Start Action will be less forceful due to less Amperage being available, regardless of machine setting. Typical settings can be between 30 and 70%, depending on electrode type. Iron Powder and Low Hydrogen rods will require less Hot Start action from 30 to 50%. Cellulosic rods may require 60 to 75%.

Hot Start Time (Duration). This is the time the Hot Start Stays engaged. The Hot Start Time will be increased on thicker plates, but in general, .5 to .7 seconds works well for plate thicknesses up to 3/8".

Open Circuit Voltage (OCV). OCV is the voltage that is present when the arc is not struck. This voltage is used to strike the arc. In general the higher the OCV, the easier it is to strike the Arc. The unit uses a higher OCV for easy arc striking.

Remote Function. This unit supports the use of remote Amperage control. This means the foot pedal can be used to control stick Amperage, if needed. For more options, contact Everlast.

Reverse Polarity. This is the same as DC Electrode Positive Polarity (DCEP+). It is an older term that is still around that many welders use which can be confusing. However, this is the standard polarity used for DC stick welding.

Stick. In North America, this is the SMAW process (Shielded Metal Arc Welding) In other regions this is called MMA (Manual Metal Arc). Stick is an older term used to refer to the stick like appearance of the welding electrodes (also known as welding rods). This is a versatile process and excels when outdoor welding is required or when large weldments are made.

HELPFUL HINT:

Pay particular attention to the Arc Force setting as it affects the aggressiveness of the arc and the amp response. Set the Arc force to approximately 30-50% and readjust it from that point to find the optimum setting. Adjust in increments of 5% up or down from there to obtain the best results Usually, an increase in the arc force for cellulose based flux welding rods is helpful. Lowering the Arc force setting is generally desirable for rods iron powder/Titania based flux. Too much arc force will create overheating of the welding rod, and even cause them to flame up. Too little can lead to sticking and arc snuffing. Use the Hot Start features to improve arc starting and cut down on failed arc strikes. Hot Start Amps refers to the % over the set amps that the amps will be boosted during arc striking until the arc is established. Hot Start Intensity controls the amount of time that the Hot Start stays engaged after the arc is struck. Start by setting Hot Start to somewhere between 30% and 50% and set hot start time to .5 -1 seconds. Adjust in increments of 5% up or down to obtain best starting results.

When welding, the weld will be slower than MIG speed. One of the most common mistakes for users transitioning from MIG to Stick welding is the travel speed. Allow the metal to fill the puddle as the rod travels forward. Be sure to try to separate the difference between the slag and the molten pool of metal. The slag will coalesce behind the puddle if travel and rod angle is correct. Do not let the slag travel in front of the puddle. Keep the top of the rod inclined to the direction of travel around 10-20 degrees while welding in the flat position (Electrode holder should be in front and inline of the puddle). To begin, simply start the arc, and then drag the rod slowly and carefully along the metal, allowing the rod flux to provide a standoff between the metal filler and the puddle. Be sure to keep feeding the rod steadily downward into the puddle as the rod melts. In the case of E6010/6011, a slight stepping motion in front of the puddle about 1/8"-1/4" in front of the puddle can be used as a key hole opens up in the weld joint, ahead of the puddle. This is also called "whipping" the rod. Do not flip the end of the rod away from the puddle in a arc motion or the arc may terminate while using E6011 or similar cellulosic rods. When experience is gained, numerous manipulation methods may be used with rods such as E7018, 7014, 6013, and 7024. Weave the rod no more than 2.5 times the width of the welding rod. To begin weaving, weave small, tight patterns similar to C's, cursive E's, V's, or even figure 8's.

Component Identification and Explanation

Explanation of Stick Functions and Terms

STICK ARC STARTING METHODS

1. Make sure the unit is turned on and the boot cycle has finished.
2. Select the Stick Process with the Selector.
3. Make sure the electrode holder is in the Positive connector and the work clamp is in the negative connector.
4. Select the Amp level desired. No voltage adjustment is available. Select Hot Start Time and Hot Start Amps % (Intensity) to improve starting reliability. Use higher amounts of Hot Start, between 50% and 75% with difficult to strike rods, or rods that aren't fresh or out of a sealed metal can.
5. Use the arc force control to select the desired arc characteristics, creating the desired arc characteristic and amp response needed to maintain the arc. Cellulose electrodes may not have the same arc force behavior as other welding electrodes, but each brand and size will weld a little differently. Typically rods such as the E6011 will require a setting 60-80% for best results. The arc force control setting will vary from person to person as well, with different rod angles, positions, and arc lengths all factoring into the arc force control performance. *If you are new to using an inverter welder, there are some aspects that will seem different. One of the main ones is that the arc is better controlled in most situations by "pushing in" when the arc seems to get weak or unstable and the arc force will kick in as the voltage drops.* **If the arc length is too long, the voltage rise will signal the inverter to shut down and will terminate welding output. This is done to limit amp draw on the circuit.** This threshold is shorter than most transformers, and an extremely long arc cannot be maintained. However, with a little practice, the arc will be easy to manage with some adaptation in technique.
6. Strike the arc with either the tapping method or the match strike method. Beginners usually find that the match strike method typically yields the best results.

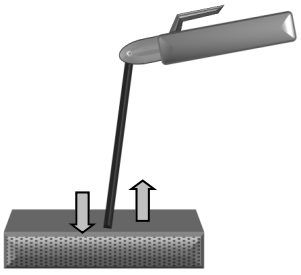

Tapping



Scratch/Match

Component Identification and Explanation

Plasma Cutter Warnings

Plasma Cutter Function Important Information and Warnings:

DANGER! Never touch any of the bare portions of the torch power connectors, fuse, consumables or torch control while the unit is switched on and torch is connected. Severe injury or death may occur if the torch trigger is accidentally activated or becomes damaged.

WARNING! Do not use sun glasses or non cutting glasses to protect the eyes. Use at least a shade 8 for plasma cutting where the arc is clearly visible. Never use less than a shade 5, and only use that for situations where the arc is not visible. Do not use cutting shades rated only for Infrared use, such as those designed for Oxy-Fuel use. These usually do not offer sufficient UV protection unless stated otherwise.

CAUTION! Keep the torch switch isolated and the consumables in place on the torch while the unit is switched on. Turn the unit off to change consumables. Do not remove the trigger safety guard or attempt to defeat its operation in any manner. If the trigger safety becomes damaged, replace immediately. Turn the machine off to replace the consumables.

WARNING! Always connect the clamp directly when possible, but the clamp should never be submerged in water, or the water may siphon down the cable through capillary action and run into the DINSE connector or the machine. If the work clamp cannot be safely attached to the work without submerging it, either lower the water level of the table, or use a thick copper jumper wire direct to the work clamp which is attached directly to the work clamp.

WARNING! A poor work clamp connection may cause faulty cutting, loss of cutting power, or excessive pilot arc engagement. The Pilot arc is not designed for continuous run and the length of its time on should be limited as much as possible. Even though the fuse may not blow if the pilot arc is left on continuously or is being used excessively, the fuse holder may overheat or become damaged. If poor cutting is experienced, with minimal penetration into the cut, the pilot arc may be staying engaged. Check the work clamp and cable for proper connection. If necessary, change the work clamp if the copper cable and strap have burned or looks corroded.

STOP!

If the pilot arc does not appear to transfer stop immediately, and investigate the cause. Usually this is a result of a poor work clamp connection, or too high of a cut height. Do not allow the pilot arc to remain on continuously. To do so will increase consumable wear greatly, or overheat the pilot arc circuit.

NOTICE:

The design of the blow back start *may* cause a slight delay in the arc as the air pressure must built inside the torch tubing and head to create the pressure needed to force the electrode off the nozzle seat. This may take up to a second, especially when using longer torches or marginal air supply systems. Restarting the arc in tip saver mode requires retriggering the torch. If the torch does not light after 3 seconds, let go of the trigger and press it again. If the start or arc is erratic check nozzle and electrode for tightness and wear.

Component Identification and Explanation

Plasma Cutter Warnings

I Selected Plasma and This Code Came Up. Why Am I Seeing it? Is It Broken?

The most probable reason for this code is that you did not connect your air supply line before you selected the plasma cutting mode. It's also possible your air pressure is too low or too high to cut. Set your air pressure between 65 and 72 PSI. Do not supply the welder itself with more than 90 PSI from the air compressor. Pressures below 40 PSI can damage the torch and the unit will shut down and display this error as well. If you've connected the air supply and you are sure the pressure is within range, give us a call for further diagnosis.



Component Identification and Explanation

Explanation of Plasma Cutting Functions and Terms

What air pressure (PSI) do I use to cut?

The unit should maintain between 65 and 72 PSI while actively cutting. For best results, set your gas while it is flowing. **Do not set above 75 PSI.** Do not significantly lower the air pressure in an attempt to improve cut at lower Amps with oversize consumables. Consumable size should always be matched to the Amp range being used to cut. Lower Amps call for smaller diameter orifices in the consumables. See the torch page and the parts information to match consumable size to the Amp range of the consumable. Using too little air pressure will rapidly accelerate wear on all torch parts and consumables. Using too high of amperage for the consumable will rapidly wear the consumable. For best results, buy a complete range of sizes of consumables to be able to tailor your cut needs.

Bevel. When plasma cutting a certain amount of bevel will be present. The cut will rarely be a true 90 degree cut. Usually 1 to 7 degrees of bevel may be present on the "keep" side. Ideally this figure is under 5 degrees of bevel. One side of the cut will have more bevel than the other. Measure the "keep" side of the bevel. Practice cut with your torch first before attempting precision requiring cuts to familiarize yourself with which side of the cut the bevel is being formed on. With the iPT60 torch the inside swirl ring can be flipped over to change the bevel side. If circle cutting, be sure you have identified the direction of bevel. Changing "clock" rotation of the torch in a circle cut will change the side of the bevel. See the instructions on circle cutting in this manual.

Blow Back Start. There are three common types of start that can be attributed to how the plasma arc is started or maintained. Two of the three are no longer used in more modern plasma cutting systems. These two are: Contact start and High Frequency start. Contact start simply means the torch must be touched to the metal and drug along to maintain an arc. High Frequency start uses points similar/same as the TIG process to create a small arc, or spark to start the arc without the torch needing to maintain contact or touch down to start. HF start with pilot arc operation causes a lot of electrical interference. The final type of start, is used in most modern plasma cuttings system. This is the Blow-back Start. In a Blow-back start torch design, when no gas is flowing and the torch is not in use, the electrode and tip rest in contact with each other, creating a closed circuit. When the torch is triggered, either a spring loaded "piston" or a specially designed spring loaded cartridge uses air pressure to drive the electrode rearward away from being in contact with the cutting tip, creating a small "Pilot Spark" energizing the pilot arc. This unit uses the modern "Blow-back" start style. For more information, see how the arc starts in the illustration located on the torch page.

Dross. Dross is the left-over oxidized metal created by the Plasma cutting arc. In an ideal cut, little or no dross will be left, as it is cleanly dispersed out the bottom of the cut. Generally, though some slight dross will be present. Dross is sometimes referred to as "slag" by people who are mostly accustomed to stick welding or cutting with oxy-fuel processes. The amount of and type of dross created is affected by torch cut height, cut speed, air pressure, consumable size and even torch angle. Two types of dross are generally present: Hard and Soft. See the instructions later in the manual to identify the type and cause of different types of dross.

Edge Start Cut. When the plasma torch reaches the upper limit of the cut capacity, piercing starts are no longer viable. Usually this is anywhere from 1/2 to 2/3 of the torch rated capacity. Cutting can still be performed, but starting a cut in the middle of the metal is no longer an option. If piercing starts are attempted near the maximum capacity of the machine, wear will greatly accelerate on all torch consumables and even the torch itself. In fact a poorly performed pierce start will completely destroy the consumable set in one cut if the pierce is performed at or near the maximum capacity of the cutter. An edge start allows the torch to be placed on the very edge of the plate to be cut to start the arc. The arc actually lights right on the edge of the metal, and the torch is brought into the metal and the cut begins. A lead in is usually used to create the cut.

Kerf. Kerf is the width of the cut. Kerf will vary according to the consumable orifice size used, the stand off height, and to a lesser extent, cut speed. Kerf width is important to maintaining cut accuracy. Testing kerf width first is advised before trying to perform cuts which need a high level of accuracy. Always remember to adjust for the kerf width. Smaller kerfs can be achieved by using smaller diameter cutting tips, but cut thickness will be limited.

Lead-In/Lead Out. Lead ins or Lead Outs are simply cuts that are made at the beginning or end of the cut that will not be used in the final part being cut. These are usually tangential to circles or start outside of the part shape and travel into or out of the cut. This is done to prevent "blow out" of the kerf width and discontinuities where the torch starts/stops.

Pierce Start Cut. When the plasma cutter is sized properly and is used in an average, daily cut, the unit will not be at the all-out maximum capacity of the machine. In this case, the torch will use the pilot arc to start the arc and will begin to pierce a hole through the metal to start the cut. Of course, if desired the pierce can happen anywhere on the metal. When hand cutting, the piercing limit can be increased by starting the cut at a slight angle to keep the sparks and molten metal for bouncing back onto the torch head, and damaging it. Once the piercing begins and the cut begins to develop, the torch can then be slowly stood fully vertical to cut as the flame begins to exit the bottom of the cut.

Problem: I just changed my consumables now my torch won't light/or the arc is blowing out my tip. What's wrong?

Did you just change your consumables? Or did someone do it for you? All iPT torches use a swirl ring. This swirl ring is used to help create the torch arc, and confine it. It is a small brown/orange high temperature plastic piece shaped like a donut with several pin holes in the side directly under the cutting tip. Sometimes it'll stick lightly to the old cutting tip, or may even be dropped, unnoticed during the change. It is lightweight, and the color may blend in with the color of the copper cutting tip. This swirl ring is rarely replaced, but must be checked for its presence before reinstalling the consumables or it can damage the torch head and cause extreme malfunction. Occasional wild or random starts with poor arc may be present.

Problem: I can touch my torch to the surface and cut, but I don't get a pilot arc when I pull the trigger.

Check your pilot arc wire in your cutting head or at the connector for breakage. The fact you can touch the torch to the metal and the cutting arc is still working indicates the pilot arc is not functioning.

Component Identification and Explanation

Explanation of Plasma Cutting Functions and Terms

How do I edge start a plasma cut?

Edge starts are the best type of start to promote consumable and torch life. This reduces blow back of molten material and allows a smooth gradual start of the arc and maximizes cutting capacity.

1) Line up the hole on the tip of the electrode on the edge of the cut. Hold torch perpendicular to the cut initially, about 1/16" off the metal. Slide the yellow safety lock and squeeze the trigger. Wait for arc to start.
2) Once the arc starts, wait for the arc to penetrate all the way through the metal.
3) As the torch penetrates the flame all the way through the metal, tilt the torch so there is a slight lead in the flame if metal is thin. If the metal being cut is thick, keep holding torch in a nearly vertical position.
4) Begin moving the torch in the direction of the cut. Maintain 1/16" to 1/8" standoff height.
5) Move the torch fast enough so the sparks and flame trail from the bottom edge at an angle of no more than 30° and no less than 10° from perpendicular to the metal. Excess angle of sparks/flame indicate too fast of travel speed or practical cut capacity has been reached. Little or no angle indicates too slow of travel speed.

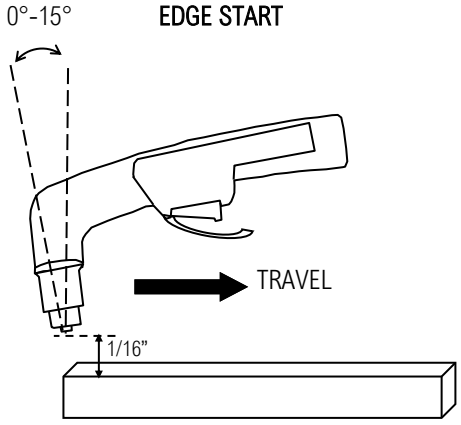

How do I pierce start a plasma cut?

Piercing starts often result in rapid consumable wear and excess blow back of molten metal deposited onto torch and consumables. This should be done only as necessary on thicker material.

1) Tilt the torch in the direction of travel or toward the side of the metal to be discarded or wasted at a 40° to 60° angle. Slide the yellow safety lock and squeeze the trigger. Wait for arc to start.
2) Once the arc starts, wait for the arc to transfer from pilot arc to the cutting arc.
3) As the flame penetrates through the metal (at a sloped angle) rotate the torch slowly to the vertical position. Tilt the torch from 0°-15° for thin metal cuts, or hold it nearly perpendicular for thicker metal cuts.
4) Begin moving the torch in the direction of the cut. Maintain 1/16" standoff height.
5) Move the torch fast enough so the sparks and flame trail from the bottom edge at an angle of no more than 30° and no less than 10° from perpendicular to the metal. Excess angle of sparks/flame indicate too fast of travel speed or practical cut capacity has been reached. Little or no angle indicates too slow of travel speed.

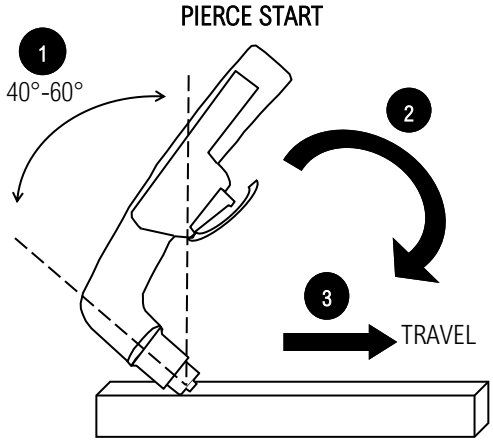

IMPORTANT:

If you use a standoff guide with the torch, it must be adjusted to provide no more than 1/8" standoff, less if possible. Long standoff heights reduce cut capacity and quality. It also promotes rapid consumable wear and can prevent the pilot arc from transferring.

Component Identification and Explanation

Explanation of Plasma Cutting Functions and Terms

How often should I check or change consumables?

Check consumables regularly for wear and change them out before they are completely worn out. A good practice is to check consumables before turning the machine on each time you prepare to cut. It takes only a few seconds and can save yourself a lot of extra effort later. Allowing the consumables to wear until they quit working may damage torch related components, creating a more costly repair. If the cut quality suddenly deteriorates and begins to show greater than 5 degrees bevel, stop and check the consumables for wear. Inspect the cut tip orifice for the telltale signs of wear including deep pitting around the orifice and an egg shaped hole. The electrode should be inspected for wear as well at this time. The cap should be pulled off, along with the tip and the swirl ring. The tip should be examined for wear. A slight pit is normal in the center of the electrode. However, if the electrode tip is pitted around the center, or the center has a deep hole in it, the tip is worn. The very center of the electrode has a special insert made of hafnium. Hafnium is an expensive and durable metal that is used for electrodes. If the hafnium insert is wearing quickly, check for water or moisture getting into the system. Also, periodically, with the unit turned off, check the spring action of the electrode by removing the cup and tip and pushing your thumb or finger down on the electrode. The electrode should depress slightly and spring back quickly without a delay. If it does not, the torch head may need to be disassembled, cleaned and lightly lubricated with di-electric grease. In some cases the sealing O-rings may be broken or dirty causing sticking. Replacement torch head kits are available if repair is not an option. Sticking of the electrode like this causes starting issues. Most often this condition occurs because of moisture and dirt that makes it way into the system. **Additionally, do not overtighten the electrode or overheat the torch (by poor cutting techniques such as excessive piercing starts on thick metal) or the electrode threads may gall in the torch head and break off during removal. Do not under tighten it either. Use the supplied wrench to tighten the electrode. Use your fingers only to tighten with this wrench. Avoid using pliers to install and remove the consumables.** This usually occurs on lower quality consumables (non-OEM) with poor chrome plating, but can occur if OEM consumables are overtight-

NOTICE:

When lowering amps to cut thinner material, you must change to smaller orifice nozzle. Nozzles are offered in different sizes which are made for different amp levels. **See the torch parts page for amp range and size of consumables.** Everlast offers OEM size and configuration of consumables originally supplied with the torch for replacements and do not offer all configurations or sizes.

Everlast is not the manufacturer of the Innotec iPT series torches and does not offer all possible consumable types available for the torch series. OEM suppliers of the Innotec iPT torches (local and online) offer extended range of sizes and configurations. If drag cutting is desired, shielded drag consumables are now available from several online sources. *.An orifice that is too large for the amps being used will result in arc instability and a rough cut.*

What should the torch flame look like?

The torch flame angle can tell you if you are cutting at the correct speed or not. Take a look at the examples below to help you determine if you are cutting at the correct speed.

FLAME AT CORRECT TRAVEL SPEED

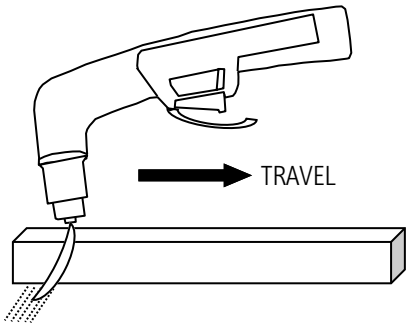

FLAME AT FAST TRAVEL SPEED

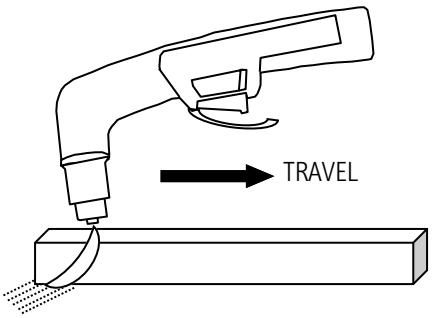

FLAME AT SLOW TRAVEL SPEED

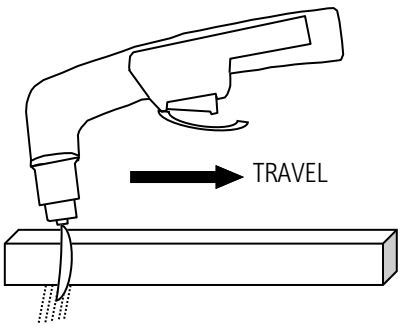

Component Identification and Explanation

Explanation of Plasma Cutting Functions and Terms

What kind of dross am I seeing?

Dross identification can help you determine what is wrong with your cuts. Use the guide below to help you improve your cut quality.

RESULTS OF CUT AT CORRECT SPEED, AIR PRESSURE AND TORCH ANGLE

SMOOTH, EVEN CUT LINES WITH A REARWARD SWEEP

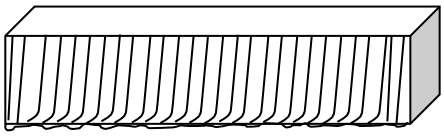

MINIMAL EASY TO CLEAN DROSS

RESULTS OF CUT AT SLOW SPEED

VERTICAL CUT LINES



SIGNIFICANT SOFT, POROUS DROSS

RESULTS OF CUT AT FAST SPEED

ROUGH, DISTINCT CUT LINES SPACED FAR APART

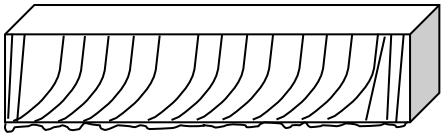

NOTICEABLE SMALL, HARD DROSS

RESULTS OF TOO MUCH STANDOFF OR WORN CONSUMABLES

TOP DROSS, SLIGHT BEVELING AT TOP

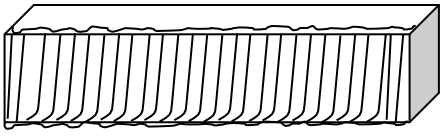

What other problems am I like to encounter?

Frequently, more than one problem may exist. Closely evaluating all issues can help narrow down cutting problems. Examine the cut for these additional issues to help you track down cut problems.

RESULTS OF TOO MUCH CURRENT OR TOO MUCH STAND OFF HEIGHT

(END VIEW)

MELTED TOP EDGE

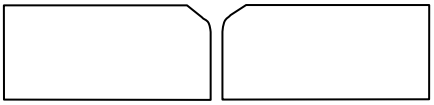

RESULTS OF WORN CONSUMABLE OR LOW AIR PRESSURE OR OUT OF SQUARE TORCH

(END VIEW)

SEVERLY ANGLED CUT AT TOP

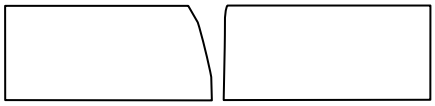

Component Identification and Explanation

Explanation of Plasma Cutting Functions and Terms

How Do I Use a Lead-in?

When cutting an object, particularly a pattern shape, where the torch must pierce or re-fire in-line at an intersection of a cut, a lead-in cut should be employed. A lead-in is a cut that is made in the disposable part (also known as a drop) of the object to "lead" into the main part of the cut so that the destructive force of the arc is not directed into the desirable side of the cut itself. Also, all plasma cutters exhibit some angularity or bevel in the cut which is greater on one side than the other. Keep this in mind (and the direction you cut) when cutting an object to size so that too much metal is not accidentally removed and the object can be finished to the proper size.

AN EXAMPLE OF CUTTING A LEAD-IN WHEN CUTTING OUT A DISK SHAPED OBJECT

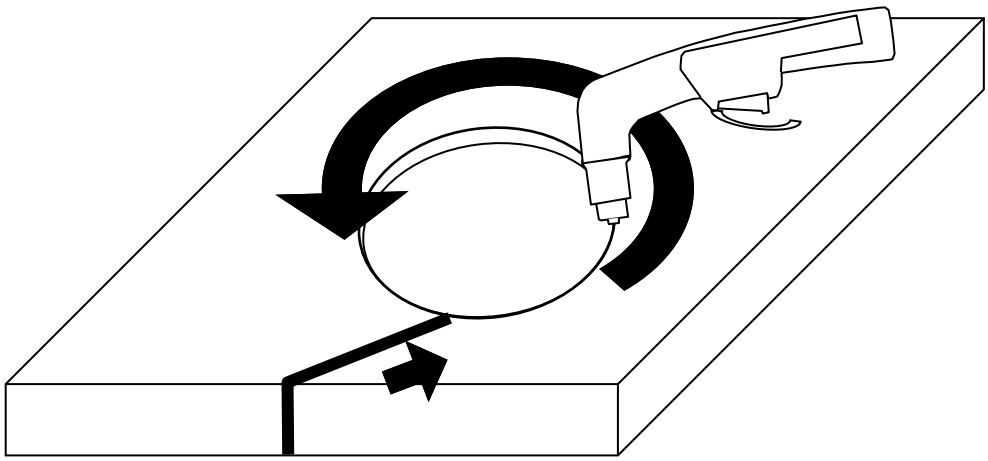

AN EXAMPLE OF CUTTING A LEAD-IN WHEN CUTTING HOLE IN AN OBJECT

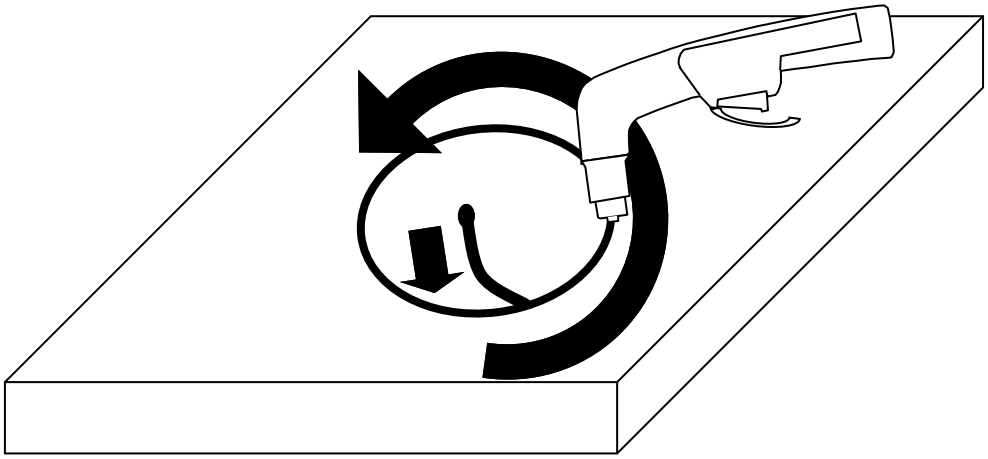

What is Kerf?

When you make a cut, a certain amount of material is removed from the cut. This is known as the kerf. In plasma cutting, knowing the width of the kerf is important to making accurate cuts. A typical kerf width from a plasma cutter will range from .045" to .090". The actual width of the kerf is affected by the orifice diameter in the consumable tip and by the cut height of the torch, and to some extent the thickness of the metal. Of course the best way to determine kerf width is to make a test cut and measure it. But if you are trying to achieve a narrow kerf width in thick plate metal, you will be limited by the fact that you will need a larger orifice to support the greater amperage needed to make a clean cut. Of course, you should always match the Amperage range to the orifice diameter. Lowering Amperage too low with a large consumable will result in arc instability and sputtering. A higher amperage consumable has a wider orifice width to support the increase in the Amperage. If the consumable size isn't increased, the higher Amperage arc will quickly "blow" its way to a wider orifice, which will lead to instability in the arc and a decrease in cut capacity since the hole is usually oblong instead of round at that point. Going with a larger diameter orifice on sheet metal means that while the cut can be performed more quickly, the kerf tolerance must be increased and figured into the cut plans. Cutting to slowly with a larger diameter consumable on thin metals will possibly yield an irregular kerf width, and "melt back", where the metal and the dross melt back and close over the area just cut. If you have no choice but to cut thin material with a wider consumable, use slightly lower air pressure. However, this will reduce the quality of the cut and will make more beveled cuts.

Component Identification and Explanation

iPT 40 Innotec Plasma Torch

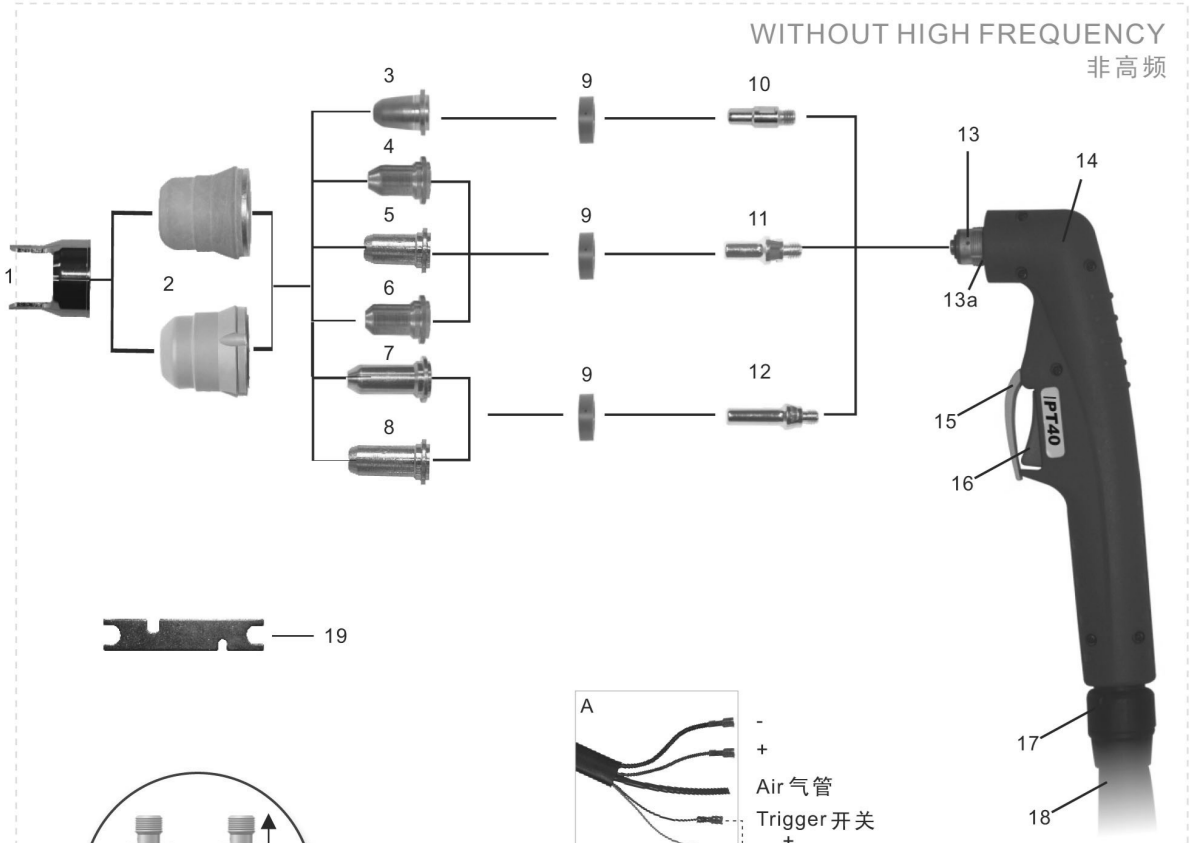

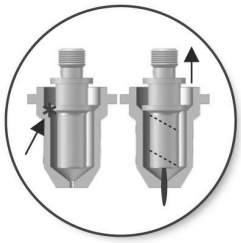



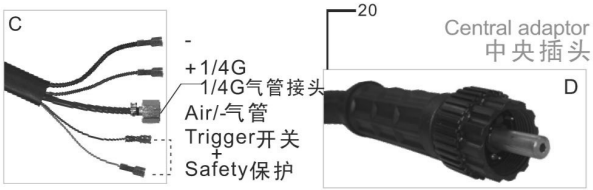

For the correct operation please use:
3-Ways Solenoid Valve,
inside orefic 2.3-2.7mm

Technical Data	技术参数
Current 额定电流	40Amp
Duty Cycle 占载率	60%
Gas 气体	Air/N_2 空气/氮气
Gas Pressure 气压	4.5–5.0 Bar
Gas Flow 气流量	100 LPM
Ignition 引弧方式	Without HF 非高频
Post Flow 气体延时	35 sec. recommended 推荐35秒
Standard Length 标准长度	6M

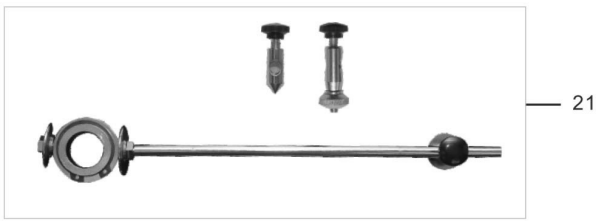

Component Identification and Explanation

iPT 40 Innotec Plasma Torch

Position	Code	Ref	Description
1	ISM0098		Double pointed spacer/PT60;两点支架/IPT60
2			Outside nozzle;外喷嘴
2.1	IVS0661	PC0116	Outside nozzle 6 holes;外喷嘴/6孔
2.2	IVS0663		Outside nozzle 6 holes/maximum life;外喷嘴/6孔/长寿命
3			Tip;喷嘴
3.1	IVU0661-06	PD0116-06	Tip Φ 0.6mm/10-20A IPT25-40;电极喷嘴 Φ 0.6mm/IPT25-40/10-20A
3.2	IVU0661-08	PD0116-08	Tip Φ 0.8mm/20-30A IPT25-40;电极喷嘴 Φ 0.8mm/IPT25-40/20-30A
3.3	IVU0661-09	PD0116-09	Tip Φ 0.9mm/30-40A IPT25-40;电极喷嘴 Φ 0.9mm/IPT25-40/30-40A
4			Tip;喷嘴
4.1	IVU0660-06		Tip Φ 0.6mm/10-20A /back striking;电极喷嘴 Φ 0.6mm/10-20A /后引弧
4.2	IVU0660-08		Tip Φ 0.8mm/20-30A/back striking;电极喷嘴 Φ 0.8mm/20-30A/后引弧
4.3	IVU0660-09		Tip Φ 0.9mm/30-40A/back striking;电极喷嘴 Φ 0.9mm/30-40A/后引弧
4.4	IVU0660-10		Tip Φ 1.0mm/40-50A/back striking;电极喷嘴 Φ 1.0mm/40-50A/后引弧
5	IVU0667-09		Tip Φ 0.9mm/IPT40 /back striking;电极喷嘴 Φ 0.9mm/IPT40/后引弧
6			Tip;喷嘴
6.1	IVU0668-09		Flat tip Φ 0.9mm/30-40A /back striking;扁平电极喷嘴 Φ 0.9mm/30-40A/后引弧
6.2	IVU0668-10		Flat tip Φ 1.0mm/40-50A /back striking;扁平电极喷嘴 Φ 1.0mm/40-50A/后引弧
7			Tip;喷嘴
7.1	IVU0609-06		Extended tip Φ 0.6mm/10-20A/back striking;加长电极喷嘴 Φ 0.6mm/10-20A/后引弧
7.2	IVU0609-08		Extended tip Φ 0.8mm/20-30A/back striking;加长电极喷嘴 Φ 0.8mm/20-30A/后引弧
8	IVU0603-09		Extended tip Φ 0.9mm/30-40A/back striking;加长电极喷嘴 Φ 0.9mm/30-40A/后引弧
9	IVF0601	PE0106	Diffuser IPT25-40;分流器 IPT25-60
10	IVB0660	PR0110	Electrode Plasma IPT25-60;等离子电极 IPT25-40
11	IVB0048		Electrode Plasma IPT25-60 back striking;等离子电极 IPT25-60/后引弧
12	IVB0049		Extended electrode Plasma IPT25-60 back striking;加长等离子电极 IPT25-60/后引弧
13	IVZ0672		Plasma torch head IPT40;等离子枪头 IPT40
13a	IFT0709		"O"ring Φ 15xΦ18mm;O型圈 Φ 15xΦ18mm
14	IGV0038		Plasma handle manual/IPT20-60/Red;等离子手工手柄/IPT20-60/红色
15	IHJ0722		Protection part/Plasma/Yellow;开关保护档片/等离子用/黄色
16	IHQ0070	185.0031	Trigger;开关
17	IHJ0898		Joint/small/new type;球节套件/小/新式
18			Cable assembly;电缆组
18.1	IVN0725		Cable assembly IPT40/4m direct;电缆组/IPT40/4m/直接连接
18.2	IVN0729		Cable assembly IPT40/4m 1/4G;电缆组/IPT40/4m 1/4G
18.3	IVN0726		Cable assembly IPT40/6m 1/4G;电缆组/IPT40/6m 1/4G
18.4	IVN0727		Cable assembly IPT40/4m seperated;电缆组/IPT40/4m/气电分离
18.5	IVN0720		Cable assembly/IPT40/6m central adaptor;电缆组/IPT40/6m/中央插头
19	ICG6006		Spanner for Plasma;等离子枪扳手
20	IZX0078	FY0023	Central adaptor torch side Plasma 5 pins;等离子中央插头/5针
21	ISM0707		Circle cutting attachment;圆周切割附件

Component Identification and Explanation

Additional Plasma Torch Information

Can I change my torch to another brand?

These units have been specifically programmed and designed for use with the blow-back design of the Innotec iPTM or a similar name brand PTM series torches. Changing out to other brands to "hybridize" the unit is not recommended and may result in damage to the machine. Some brands use a higher arc voltage, and this is controlled by the torch's internal design and tolerances. These torches may work for a while, and offer the added convenience of cheaper bulk consumables, but will eventually damage the machine by forcing it to generate a higher arc voltage than it was designed for at any given amperage. It can also theoretically affect duty cycle ratings. If you desire to use another torch with this machine, consult with Everlast before changing. There are some appropriate options.

Why is my torch pilot arc sputtering or going on and off when I pull the trigger.

Pilot arc sputtering is often caused by several factors. The first, air pressure is too low. The second is that it may be too high. However, the third reason, and likely the most common reason is that the consumable size has not been matched with the Amperage setting of the machine. The unit is shipped with consumable sizes designed to be used at or near the maximum output of the machine. When you lower the amperage, the arc is simply being blown out or destabilized. Think of a small garden hose you may use outside your house. Then think of (if it were possible) connecting a fire hose to the same faucet and how weak and unstable the stream would be. Water and electricity do share similar characteristics. Use the torch page for your cutter to identify the proper size and type of consumable for your application.

How do I set my plasma cutter for hand cutting?

Hand cutting is easy to learn and set. The maximum Amperage setting of your unit will cut even the thinnest pieces and do it well. However, there are two issues concerning this. You may have to move extremely fast, or dross will build up or the metal may weld itself back together. And, you may have a wider kerf than is desired. In order to avoid this, and get the most out of your unit, use the following guide to set your amperage, and to get your machine setup correctly. Be sure to then match the consumable size to the amperage being used.

- Keep your standoff to **less** than 1/8" distance from the work piece.
- Always use dry air. Drain compressor daily to improve effectiveness of air dryers and to prevent them from prematurely failing.
- Make sure work clamp is attached directly to the part being cut. Make sure the work clamp is attached to freshly cleaned metal.
- Don't greatly lower air pressure to try to reduce kerf or cut thinner material. Always reduce nozzle orifice size to match amperage. *See Torch pages for different consumable sizes.*
- Use this as a general rule of thumb for good hand cutting speed and quality:
    1. For the first 1/8" of thickness, use 20 amps.
    2. After the first 1/8" add 10 amps for every 1/8" after that.
    3. For Stainless and Aluminum, use settings that are 40% higher.

Troubleshooting

Error Codes

Trouble Code with Warning Screens	Diagnosis
E01	OVER TEMPERATURE/ DUTY CYCLE EXCEEDED. Allow unit to rest for 15 minutes while running. The unit should reset. If it does not or condition reoccurs, check for obstacles near unit blocking cooling. Then clean unit internals paying close attention to boards and heat sinks. Make sure unit is unplugged for 10 minutes before opening up for cleaning.
E02	OVER OR UNDER CURRENT. Check power input cable for length/size, check input voltage. Running on poor quality power supply or dirty power from generator. Possible Internal Issue.
E05	TORCH SWITCH IS STUCK CLOSED. This simply means that the arc has been trying to start and for too long. If this does not clear after releasing the switch, turn off unit immediately and check torch switch for stuck contact. If the pilot arc is engaged without attempting to cut for more than 3 seconds this will activate.
E06	AIR PRESSURE TOO LOW OR NOT CONNECTED. Increase air pressure to normal operating air pressure of 65 to 72 PSI. Air pressure safety cut out will engage around 45PSI.
OTHER	CONTACT EVERLAST

Troubleshooting

Common MIG/Flux Cored Issues

NO.	Trouble	Possible Cause	Solution
1.	Unit is switched on, but the fans and display won't run or light up.	Switch damaged. Service Breaker/ Input Line Damaged	Check. Replace.
2.	After welding machine is overheating and the fan does not work.	Fan damaged. Fan connector plus is loose	Replace. Check. Reinstall.
4.	Intermittent, wandering arc.	Work Clamp not connected directly to part being welded. Work Clamp worn/damaged Torch height too high.	Reconnect. Replace. Reduce MIG torch height to under 3/8".
5.	Porosity of the Weld. Discolored weld color. Tungsten is discolored.	Low flow rate of shielding gas. High flow rate of shielding gas. Possible gas leaks internally or externally due to loose fittings. Base metal is contaminated with dirt or grease.	Increase flow rate on regulator. Check for kinks in tubing. Increase post-flow time. Reduce stick-out to less than 1/4". Increase gas nozzle size. Clean metal thoroughly with approved metal cleaner, or use acetone and a rag to clean metal.
6.	Weld quality is poor. Weld is dirty/oxidized, or porous.	Drafty conditions. The welder is located on the workpiece and is blowing gas off due to fan activity. Solenoid is sticking. For Flux Core, a certain amount of spatter, haxe and smoke is common.	Eliminate drafts. Move welder. Check if there is sufficient shielding gas left in tank. Check gas flow. Adjust for higher flow of gas. Listen for audible click of gas solenoid. If no click is heard, then contact Everlast Support. Clean weld properly. Increase pre flow or post flow. Check polarity is correct for either MIG or Flux-Core, especially after changing between processes.
7.	Unstable Arc. Spatter.	Bad work clamp connection. Metal is indirectly connected through table or other item. Incorrect settings	Change Work Clamp. Use a direct connection to the part being welded. Check and adjust settings. Spatter usually increases when smaller wires are at the maximum welding capacity.
8.	Continuous Overheating	Settings too high. Too large of wire for job. Fan not running.	Reduce Settings, use smaller wire Check fan, repair or replace if not running or running at low speed. If it is not running correctly (fan should run continuously) contact Everlast.
9.	Other.		Contact Everlast.

Troubleshooting

Common TIG Issues

NO.	Trouble	Possible Cause	Solution
1.	Unit is switched on, but the power light isn't on.	Switch damaged. Service Breaker/ Input Line Damaged.	Check. Replace.
2.	After welding machine is overheating .	Duty Cycle Exceeded. Fan damaged and not running. Fan connector plus is loose. Temp Sensor damaged Unit is dirty	Do Not Turn off if fan is running. Allow to cool while running and unit should automatically reset. Allow to continue to cool for no less than 15 minutes after duty cycle is exceeded, even if the unit resets before this time. Replace. Check. Reinstall. Check operating temperature in background menu and check fan operation. Check and clean.
3.	When switch/pedal is pressed, no gas flows.	Empty Cylinder/ Closed Valve. Regulator Faulty/shut off. Solenoid Dirty/Stuck Shut. Damaged PCB.	Check. Replace/Open Valve. Check regulator and cylinder. Check. Clean or replace. (Contact Everlast Technical Support). Contact Everlast Technical Support.
4.	When switch/pedal is released gas continues to flow after Post-Flow cycle has timed out. May happen irregularly, or when unit is turned on.	Solenoid Dirty/Stuck. Excess moisture from Argon Cylinder.	Disassemble and clean, or replace. (Contact Everlast Technical Support). Install a dryer inline to remove moisture. Solenoid may need to be cleaned or replaced.
5.	Intermittent, wandering arc.	Work Clamp not connected directly to part being welded. Work Clamp worn/damaged. Torch height too high. Wrong Polarity	Reconnect. Replace. Reduce TIG torch height to under 1/8". Drag Welding Rod (Stick. Torch should be in negative for all TIG work. Stick should be positive.
6.	Arc will not start unless lift started.	HV/HF board is damaged or disconnected HV/HF settings are incorrect HF Start not selected.	Make sure unit is set to HF Start. Adjust Settings
7.	Tungsten is rapidly consumed.	Inadequate gas flow. Too small of tungsten. Wrong shielding gas. Using green tungsten. Wrong polarity. Possible contamination of shielding gas from gas supplier. Welder is too close to work.Fans are blowing gas.	Check gas flow. Check for Leaks thoughout system/regulator/tank. Check for 100% Argon. Use Lanthanated 2% or any other type besides Green (Pure) or Zirconiated. Put torch in Negative terminal. Move unit 6 to 8 ft away.
8.	Tungsten is contaminated, arc changes to a green color.	Tungsten is dipping into weld. Too long of stick-out. Tungsten is melting.	Check and adjust stick out to 1/8". Reduce stick-out to less than 1/4". Reduce amperage or increase tungsten size.
9.	Porosity of the Weld. Discolored weld color. Tungsten is discolored.	Low flow rate of shielding gas. High flow rate of shielding gas. Tungsten stick-out is too far. Too short of post flow period. Wrong TIG cup size. Possible gas leaks internally or externally due to loose fittings. Base metal is contaminated with dirt or grease.	Increase flow rate on regulator. Check for kinks in tubing. Increase post-flow time. Reduce stick-out to less than 1/4". Increase cup size, or use gas lens. Clean metal thoroughly with approved metal cleaner, or use acetone and a rag to clean metal.
10.	Weld quality is poor. Weld is dirty/oxidized, or porous.	Drafty conditions. The welder is located on the workpiece and is blowing gas off due to fan activity. Solenoid is sticking. Too short of pre-flow or post-flow.	Eliminate drafts. Move welder. Check if there is sufficient shielding gas left in tank. Check gas flow. Adjust for higher flow of gas. Listen for audible click of gas solenoid. If no click is heard, then contact Everlast Support. Clean weld properly. Increase pre flow or post flow.
11.	Unstable Arc.	Poorly ground or shaped tungsten. Bad work clamp connection. Metal is indirectly connected through table or other item.	Regrind to proper point. Wrong polarity. Place torch in DC negative (-). Connect work clamp directly to item being welded.
12.	AC TIG will not weld properly.	Wrong polarity. Work clamp is not connected direct to work. Balled Tungsten. AC Balance too high. AC Frequency too low. Contaminated Gas.	Check and change immediately. TIG torch is always negative. Put clamp direct to work. Sharpen Tungsten. Do not use form ball. Set for approximately 30%. Increase to 50 Hz or higher. Source new cylinder or new supplier.
13.	Other.		Contact Everlast.

Troubleshooting

Common Plasma Cutting Issues

NO.	Trouble	Cause/Solution
1.	Air flows but arc does not start within 2-3 seconds.	Check consumables for wear and tightness. Check fuse. Check Air Pressure. Sticky or slow spring/piston on torch blow back mechanism. Release trigger and try again.
2.	Air flows but pilot arc does not start or spark but arc starts when nozzle is rubbed on the metal.	Fuse blown. Replace with 30 A automotive type, slow blow. PCB issue.
3.	Will not start arc.	Air Pressure too low or too high. Torch electrode/blow back mechanism stuck in rear position (Clean and relubricate or replace head). Missing Swirl Ring (usually happens after consumable change).
4.	Pilot arc will not light. Arc will start when torch is drug on the metal.	Possible missing swirl ring. Pilot Arc wire is disconnected.
	Pilot arc will not transfer and amps read approximately 25-27 amps while switch is held. (Arc barely cuts or only "scratches" the surface of the metal or cut is extremely slow on thin materials.)	Check work clamp connection. Make sure rust is removed from work clamp contact area. Faulty Clamp. Arc continuity is not being sensed. If these steps do not correct the issue, contact Everlast.
5.	Arc Sputters.	Inadequate air flow or air pressure. Improperly sized nozzle. Change to nozzle/Tip with smaller diameter orifice as amps are lowered. Readjust air pressure. Loose consumables. Check tightness. Worn Consumables
6.	Consumables are dirty, smutty looking upon inspection. Premature wear on consumables. Shortened consumable life. Tips are melted looking.	Moisture, oil contamination of consumable. Wrong consumables. Poor quality aftermarket consumables. Drag cutting with wrong consumables. Wrong cutting technique.
7.	Premature wear on consumables. Short consumable life. Uneven wear of consumables, melting of cup.	Moisture, oil contamination of consumable. Excessive pilot arc time. Improper cutting technique. Wrong piercing technique.
8.	Arc will not start with pilot arc or by drag/scratch starting nozzle directly on metal. Machine runs.	Torch cup is loose, safety contact pins dirty or not making contact with cup face. Torch switch wire is loose. Problem with Central connector. Torch is not properly connected. IGBT or PCB bad, contact Everlast.
9.	Over current/Duty cycle Error Code. Machine runs, but no output.	Duty cycle exceeded or Over current. Allow machine to cool. Reset main power switch after full cool down period. Make sure fan is not blocked. Check wiring and remove excess/undersized extension cords. Operated on "dirty power" generator and unit has failed.
10.	Unstable arc at lower amps.	Nozzle orifice size is too large. Use nozzle with smaller orifice. Air pressure too high or too low. Poor work clamp connection.
11.	Arc tries to start but irregular, dancing arc and/or arc melts through side of nozzle.	Missing swirl ring, or worn electrode or both. Check and replace. Make sure swirl ring is not cracked.
12.	Arc will try to start if touched to the metal, but no air flow while switch is pressed.	Stuck or dirty solenoid valve. Loose solenoid wire connection. Bad PCB. Contact Everlast.
13.	Air flows continuously. Erratic or unpredictable shutting off of air after post flow time has expired.	Place switch into "normal" or "cut" mode. Reduce post flow time. Solenoid is stuck. Contact Everlast.
14.	Excessively Beveled Cut.	Worn consumables, too high of stand-off height.
15.	Cup and/or nozzle is melting or cracking.	Improper cutting technique/excessive piercing.
16.	Power input circuit breaker trips repeatedly.	Improperly sized circuit. Internal issue. Contact Everlast.
17.	Arc "Blows Out" when ready to cut.	Too high of air pressure. Wrong size consumable for amperage being used.
18.	Error code displays as soon as process is selected	Air is disconnected or too low or high. Connect air, Check air pressure at tank, increase or decrease air pressure until the error code disappears.